AUTOMATIC TRANSMISSION

MEMO

A43D Automatic Transmission

DESCRIPTION

General

The A43D is a 4–speed automatic transmission.

The A43D transmission is mainly composed of the torque converter clutch, the overdrive (hereafter called 0/D) planetary gear unit, 3–speed planetary gear unit, the hydraulic control system and the electronic con–trol system.

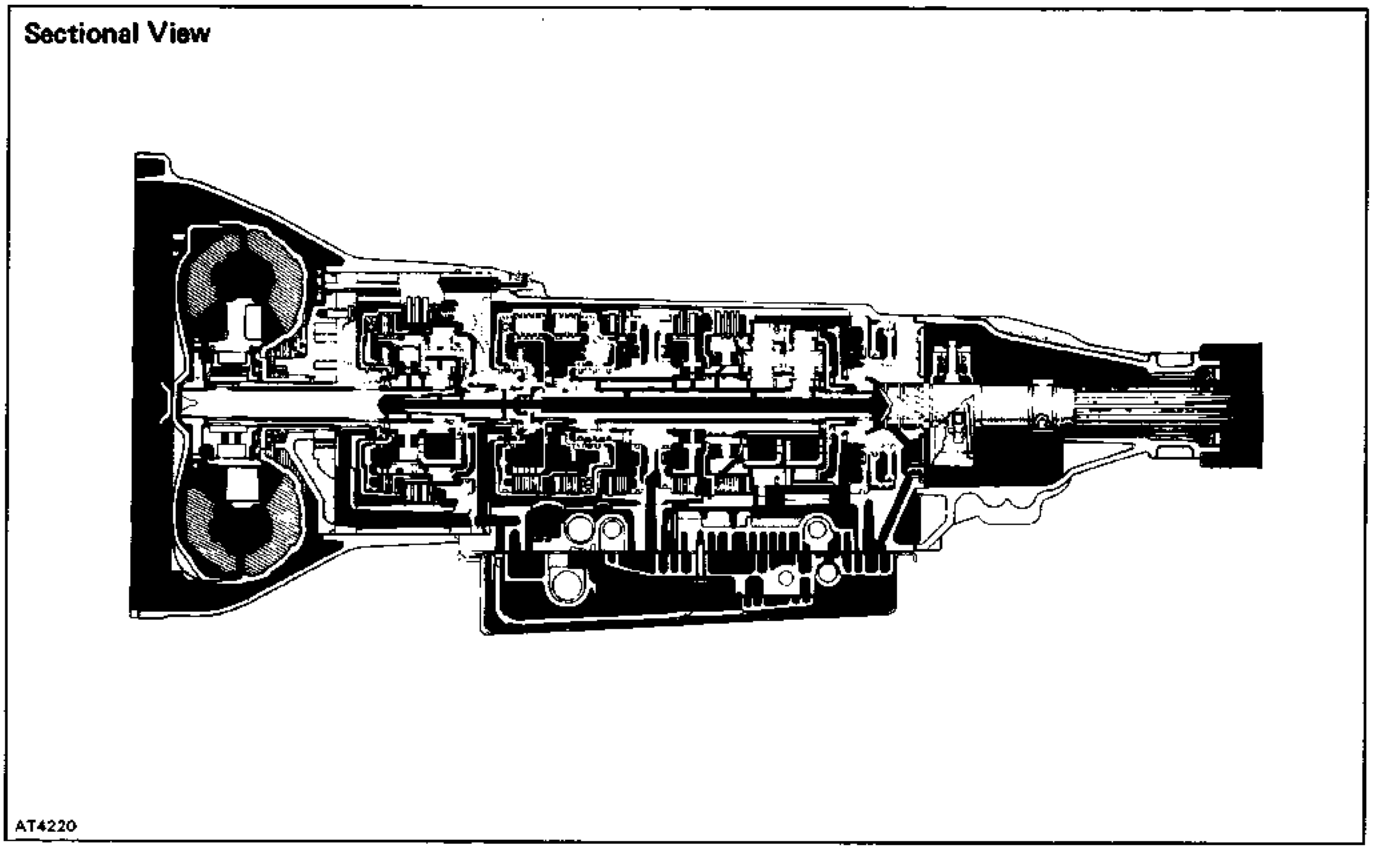

General Specifications

Type of Transmission			A43D
Type of Engine			22R-E
Torque Converter Clutch	Stall Torque Ratio		1.75 : 1
	Lock–Up Mechanism		Equipped
Gear Ratio	1 st Gear		2.452
	2nd Gear		1.452
	3rd Gear		1.000
	O/D Gear		0.688
	Reverse Gear		2.212
Plates (Disc/Plate)	C_0	O/D Direct Clutch	1/0
	C_1	Front Clutch	4/4
	C_2	Rear Clutch	3/3
	B_2	No.2 Brake	3/3
	B_3	No.3 Brake	5/4
	B_0	O/D Brake	3/3
	B_1	No. 1 Brake	1/1
ATF	Type		ATF DEXRON® II
	Capacity liter (US qts, Imp.qts)	Total	6.5 (6.9, 5.7)
		Drain and Ref ill	2.4 (2.5, 2.1)

OPERATION

Mechanical Operation

OPERATING CONDITIONS

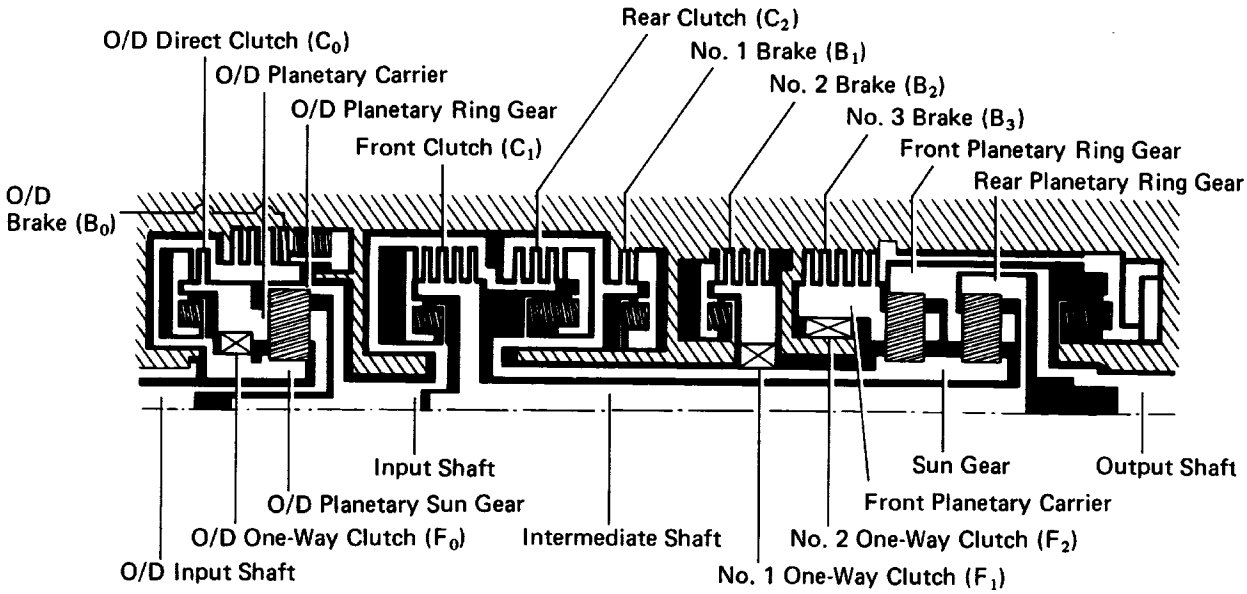

AT3283

○ ..... Operating

Shift lever position	Gear position	C_0	C_1	C_2 I.P.	C_2 O.P.	B_0	B_1	B_2	B_3 I.P.	B_3 O.P.	F_0	F_1	F_2
P	Parking	○							○	○	○		
R	Reverse	○		○	○				○	○	○		
N	Neutral	○									○		
D	1 st	○	○								○		○
	2nd	○	○					○			○	○	
	3rd	○	○		○			○			○		
	O/D		○		○	○		○					
2	1st	○	○								○		○
	2nd	○	○				○	○			○	○	
L	1 st	○	○						○	○	○		○

I.P. ..... Inner Piston
O.P. ..... Outer Piston

FUNCTION OF COMPONENTS

NOMENCLATURE	OPERATION
O/D Direct Clutch (C_O)	Connects overdrive sun gear and overdrive carrier
O/D Brake (Bo)	Prevents overdrive sun gear from turning either clockwise or counterclockwise
O/D One–Way Clutch (Fo)	When transmission is being driven by engine, connects overdrive sun gear and overdrive carrier
Front Clutch (C_I)	Connects input shaft and intermediate shaft
Rear Clutch (C_2)	Connects input shaft and front & rear planetary sun gear
No. 1 Brake (B_1)	Prevents front & rear planetary sun gear from turning either clockwise or coun–terclockwise
No.2 Brake (B_2)	Prevents outer race of F_1 from turning either clockwise or counterclockwise, thus preventing front & rear planetary sun gear from turning counterclockwise
No.3 Brake (B3)	Prevents front planetary carrier from turning either clockwise or counterclock–wise
No. 1 One–Way Clutch (F_1)	When B_2 is operating, prevents front & rear planetary sun gear from turning counterclockwise
No.2 One–Way Clutch (F_2)	Prevents front planetary carrier from turning counterclockwise

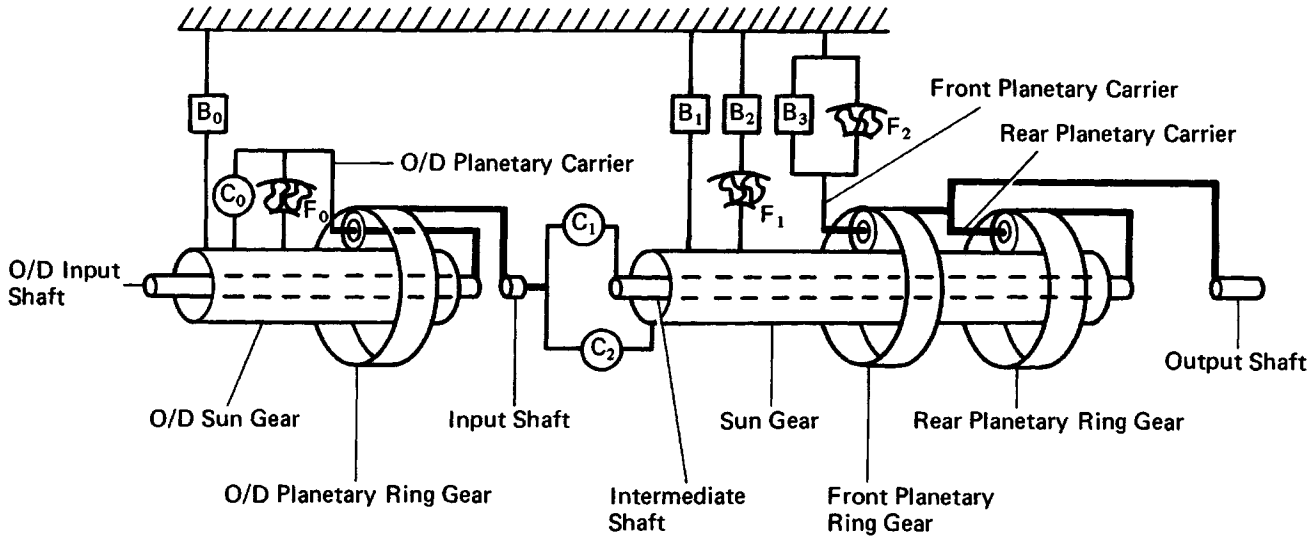

AT3282

FUNCTION OF COMPONENTS (Cont'd)

The conditions of operation for each gear position are shown in the following illustrations:

D or 2 Position 1st Gear

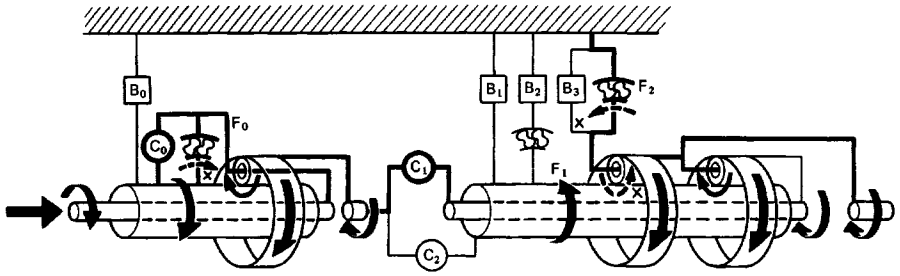

AT7802

D Position 2nd Gear

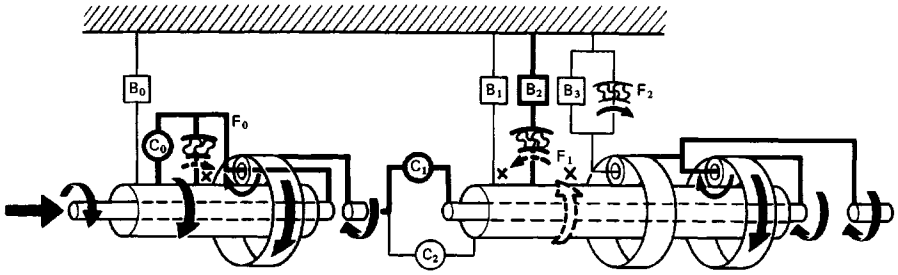

AT7803

D or 2 Position 3rd Gear

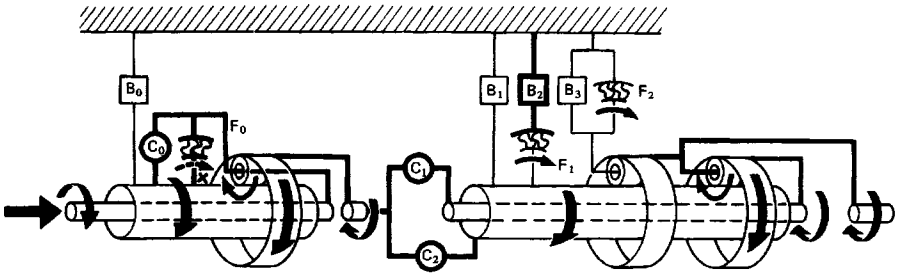

AT7804

D Position O/D

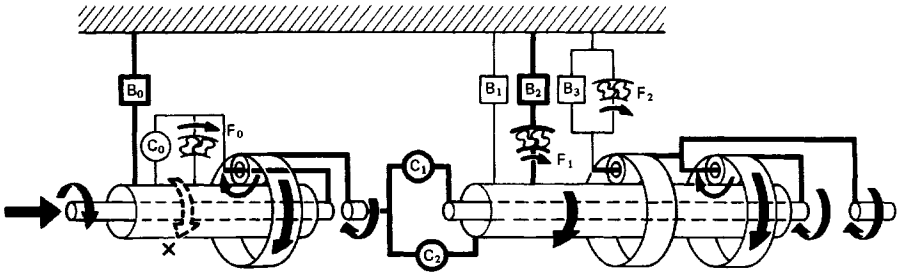

AT7805

FUNCTION OF COMPONENTS (Cont'd)

2 or L Position 2nd Gear

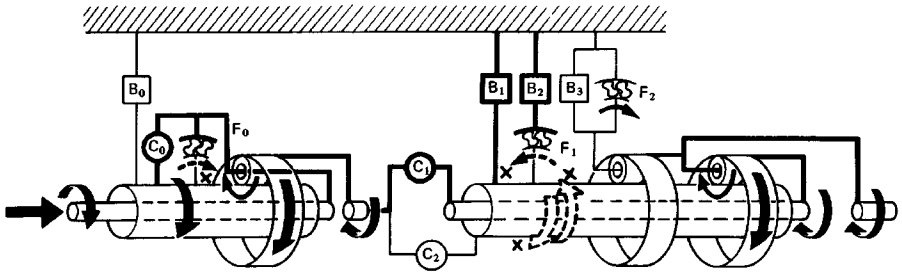

AT7806

L Position 1st Gear

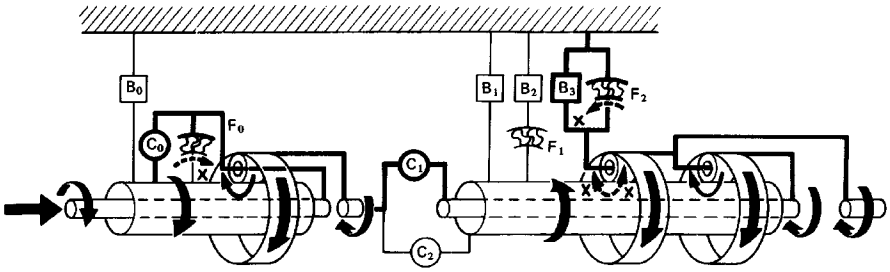

AT7807

R Position Reverse Gear

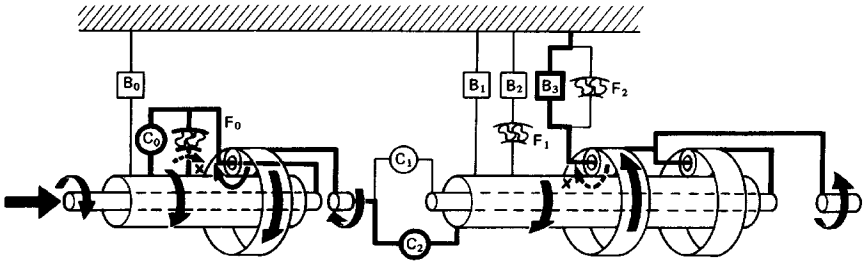

AT7808

Hydraulic Control System

The hydraulic control system is composed of the oil pump, the valve body, the governor body, the accumu–lators, the clutches and brakes as well as the fluid passages which connect all of these components.
Based in the hydraulic pressure created by the oil pump, the hydraulic control system governs the hydraulic pressure acting on the torque converter clutch, clutches and brakes in accordance with the vehicle driving conditions.

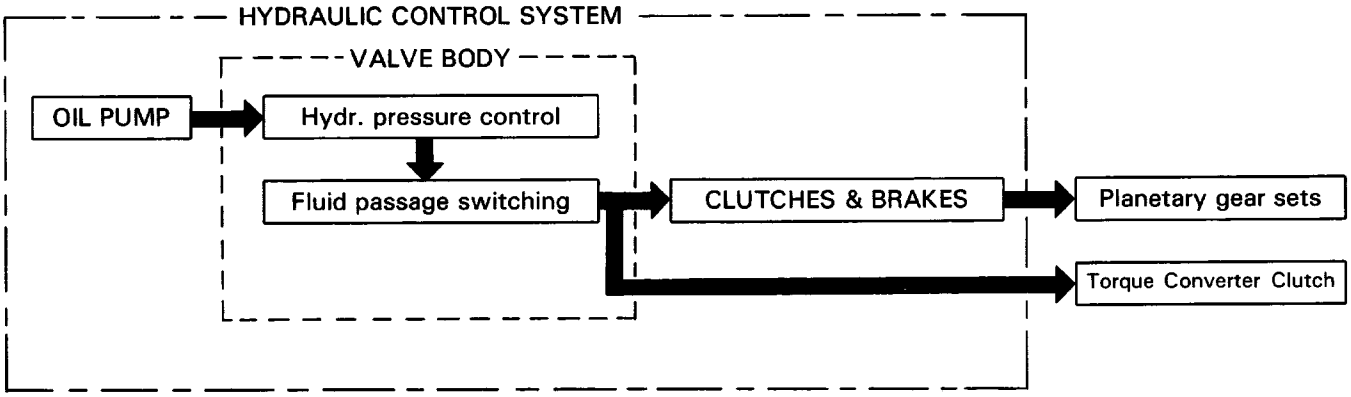

TROUBLESHOOTING
Basic Troubleshooting

1. Troubleshooting occuring with the automatic transmission can be caused by either the engine, electrical control or the transmission itself. These three areas should be distinctly isolated before proceeding with troubleshooting.
2. Troubleshooting should begin with the simplest operation, working up in order or difficulty, but first determine whether the trouble lies within the engine, electrical control or transmission.
3. Proceed with the inspection as follows:

PRELIMINARY CHECK (See page AT–14)
(a) Check the tire inflation.
(b) Check the idle speed.
(c) Check the fluid level and fluid condition.
(d) Check the throttle cable mark.
(e) Check the shift linkage.
(f) Check the Park/Neutral Position Switch.

↓

STALL TEST (See page AT–20)
Check the engine and torque converter clutch.

↓

TIME LAG TEST (See page AT–21)
Check the automatic transmission (each clutch, brake and gear) for wear.

↓

HYDRAULIC TEST (See page AT–22)
Measure the line pressure and make basic check of fluid circuit.

↓

ROAD TEST (See page AT–24)
Confirm if trouble lies within automatic transmission. If noisy or vibrating, the possible cause could be with the engine, drive shaft, tires, etc.

(No up–shift to overdrive/No down–shift from overdrive)

OVERDRIVE CONTROL SYSTEM CHECK (See page AT–16)

General Troubleshooting

Problem	Possible cause	Remedy	Page
Fluid discolored or smells burnt	Fluid contaminated Torque converter clutch faulty Transmission faulty	Replace fluid Replace torque converter clutch Disassemble and inspect transmission	AT–14 AT–40
Vehicle does not move in any forward position or reverse	Manual linkage out of adjustment Valve body or primary regulator faulty Parking lock pawl faulty Torque converter clutch faulty Converter drive plate broken Oil pump intake screen blocked Transmission faulty	Adjust linkage Inspect valve body Inspect parking lock pawl Replace torque converter clutch Replace drive plate Clean screen Disassemble and inspect transmission	AT–15 AT–31 AT–40 AT–40
Shift lever position incorrect	Manual linkage out of adjustment Manual valve and lever faulty Transmission faulty	Adjust linkage Inspect valve body Disassemble and inspect transmission	AT–15
Harsh engagement into any drive position	Throttle cable out of adjustment Valve body or primary regulator faulty Accumulator pistons faulty Transmission faulty	Adjust throttle cable Inspect valve body Inspect accumulator pistons Disassemble and inspect transmission	AT–15
Delayed 1–2, 2–3 or 3–0/D up–shift, or down–shift from O/D–3 or 3–2 then shifts back to O/D or 3	Throttle cable out of adjustment Valve body faulty Governor body faulty	Adjust throttle cable Inspect valve body Inspect governor body	AT–15
Slips on 1–2, 2–3 or 3–0/D up–shift, or slips or shudders on acceleration	Manual linkage out of adjustment Throttle cable out of adjustment Valve body faulty Transmission faulty	Adjust linkage Adjust throttle cable Inspect valve body Disassemble and inspect transmission	AT–15 AT–15

Remark *: Refer to A43D Automatic Trans–mission Repair Manual.
(Pub. No. RM 272U)

General Troubleshooting (Cont'd)

Problem	Possible cause	Remedy	Page
Drag, binding or tie–up on 1–2, 2–3 or 3–O/D up–shift	Manual linkage out of adjustment Valve body faulty Transmission faulty	Adjust linkage Inspect valve body Disassemble and inspect transmission	AT–15
Harsh down–shift	Throttle cable out of adjustment Throttle cable and cam faulty Accumulator pistons faulty Valve body faulty Transmission faulty	Adjust throttle cable Inspect throttle cable and cam Inspect accumulator pistons Inspect valve body Disassemble and inspect transmission	AT–15 AT–15
No down–shift when coasting	Valve body faulty Governor body faulty	Inspect valve body Inspect governor body	★
Down–shift occurs too quickly or too late while coasting	Throttle cable faulty Valve body faulty Governor body faulty Transmission faulty	Inspect throttle cable Inspect valve body Inspect governor body Disassemble and inspect transmission	AT–15
No O/D–3, 3–2 or 2–1 kick–down	Throttle cable out of adjustment Governor body faulty Valve body faulty	Adjust throttle cable Inspect governor body Inspect valve body	AT–15
No engine braking in 2 or L position	Valve body faulty Transmission faulty	Inspect valve body Disassemble and inspect transmission	★
Vehicle does not hold in P	Manual linkage out of adjustment Parking lock pawl cam and spring faulty	Adjust linkage Inspect cam and spring	AT–15 AT–15

Remark * : Refer to A43D Automatic Trans–mission Repair Manual.
(Pub. No. RM272U)

Preliminary Check

1. CHECK FLUID LEVEL

HINT:

- The vehicle must have been driven so that the engine and transmission are at normal operating temperature. (Fluid temperature: 70–80°C or 158–176°F)
- Only use the COOL range on the dipstick as a rough reference when the fluid is replaced or the engine does not run.

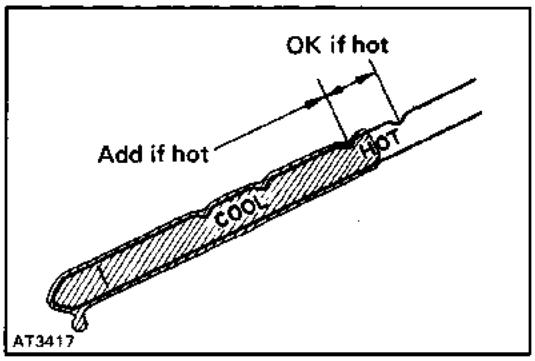

(a) Park the vehicle on a level surface, set the parking brake.

(b) With the engine idling, shift the shift lever into all positions from P to L position and return to P position.

HINT: Depress brake pedal.

(c) Pull out the transmission dipstick and wipe it clean.

(d) Push it back fully into the tube.

(e) Pull it out and check that the fluid level is in the HOT range.

If the level is at the low side, add fluid.

Fluid type: ATF DEXRON® II

NOTICE: Do not overfill.

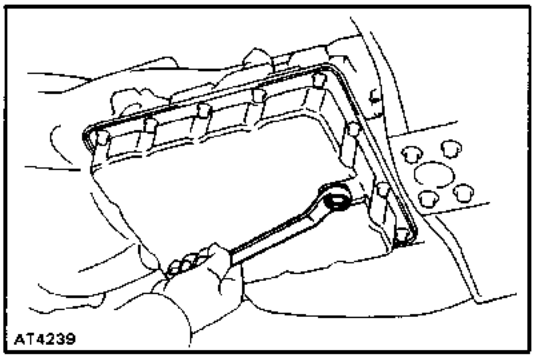

2. CHECK FLUID CONDITION

If the fluid smells burnt or is black, replace it as following procedures.

(a) Remove the drain plug and drain the fluid.

(b) Reinstall the drain plug securely.

(c) With the engine OFF, add new fluid through the oil filler tube.

Fluid type ATF DEXRON® II

Capacity:

Total: 6.5 liters (6.9 US qts, 5.7 Imp qts)

Drain and refill: 2.4 liters (2.5 US qts, 2.1 Imp.qts)

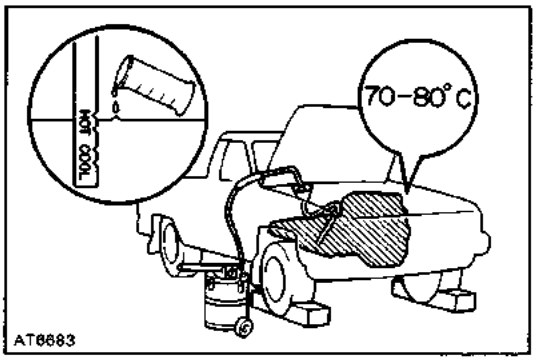

(d) Start the engine and shift the shift lever into all positions from P to L position and then shift into P position.

(e) With the engine idling, check the fluid level. Add fluid up to the COOL level on the dipstick.

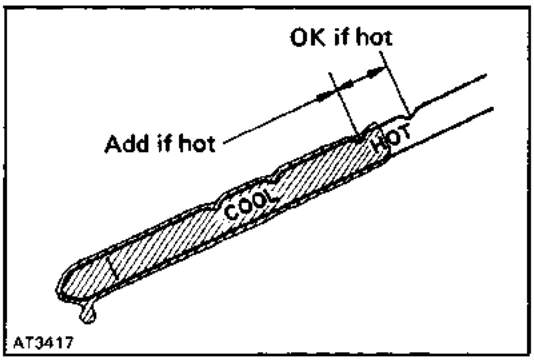

(f) Check the fluid level with the normal operating temperature (70–80°C or 158–176 °F) and add as necessary.

NOTICE: Do not overfill.

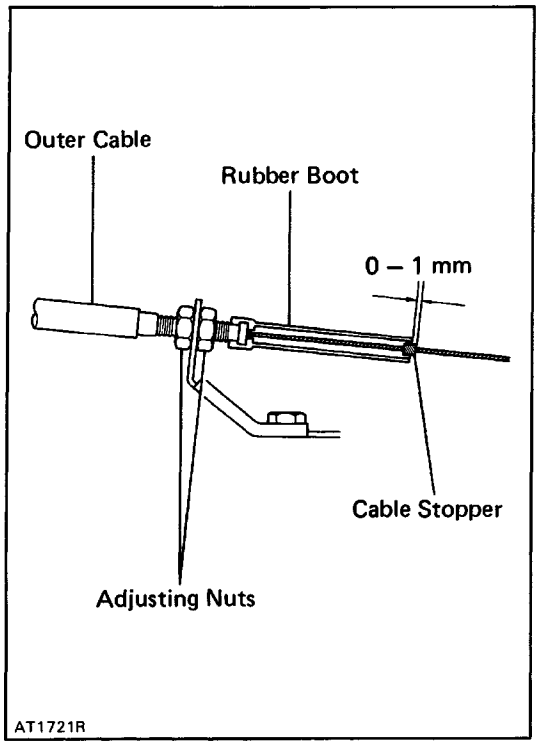

3. INSPECT THROTTLE CABLE

(a) Depress the accelerator pedal all the way and check that the throttle valve opens fully.

HINT: If the valve does not open fully, adjust the accel–erator cable.

(b) Fully depress the accelerator pedal.

(c) Measure the distance between the end of the boot and stopper on the cable.

Standard distance: 0–1 mm (0–0.04 in.)

If the distance is not standard, adjust the cable by the ad–justing nuts.

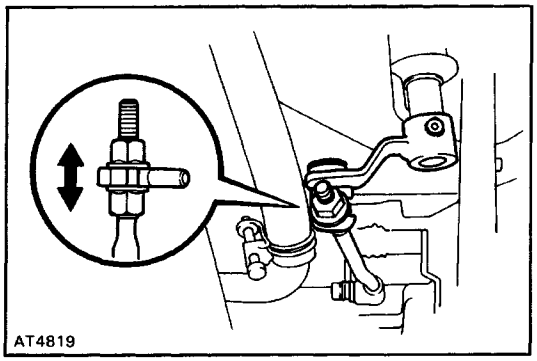

4. INSPECT SHIFT LEVER POSITION

When shifting the shift lever from the N position to other positions, check that the lever can be shifted smoothly and accurately to each position and that the position in–dicator correctly indicates the position.

If the indicator is not aligned with the correct position, carry out the following adjustment procedures.

(a) Remove the nut on the cross shaft rod.

(b) Push the cross shaft rod fully downward.

(c) Return the cross shaft rod three notches to N posi–tion.

(d) Set the shift lever to N position.

(e) While holding the shift lever lightly toward the R po–sition side, adjust the cross shaft rod nut.

(f) Tighten the cross shaft rod nut.

(g) Start the engine and make sure that the vehicle moves forward when shifting the lever from the N to D position and reverse when shifting it to the R po–sition.

5. INSPECT PARK/ NEUTRAL POSITION SWITCH

Check that the engine can be started with the shift lever only in the N or P position, but not in other positions.

If not as stated above, carry out the following adjustment procedures.

(a) Loosen the park/neutral position switch bolt and set the shift lever to the N position.

(b) Align the groove and neutral basic line.

(c) Hold in position and tighten the bolt.

Torque: 5.4 N–m (55 kgf–cm, 48 in.lbf)

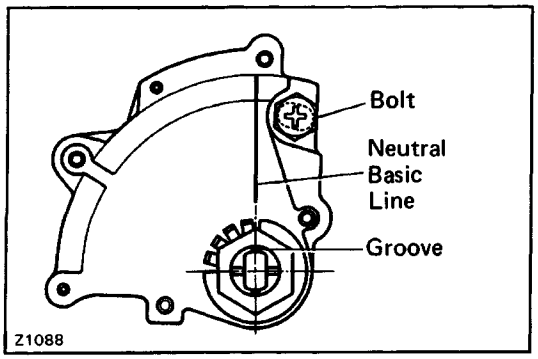

6. INSPECT IDLE SPEED (N POSITION)

Idle speed: 750 RPM

Overdrive Control System

ELECTRIC CONTROL CIRCUIT

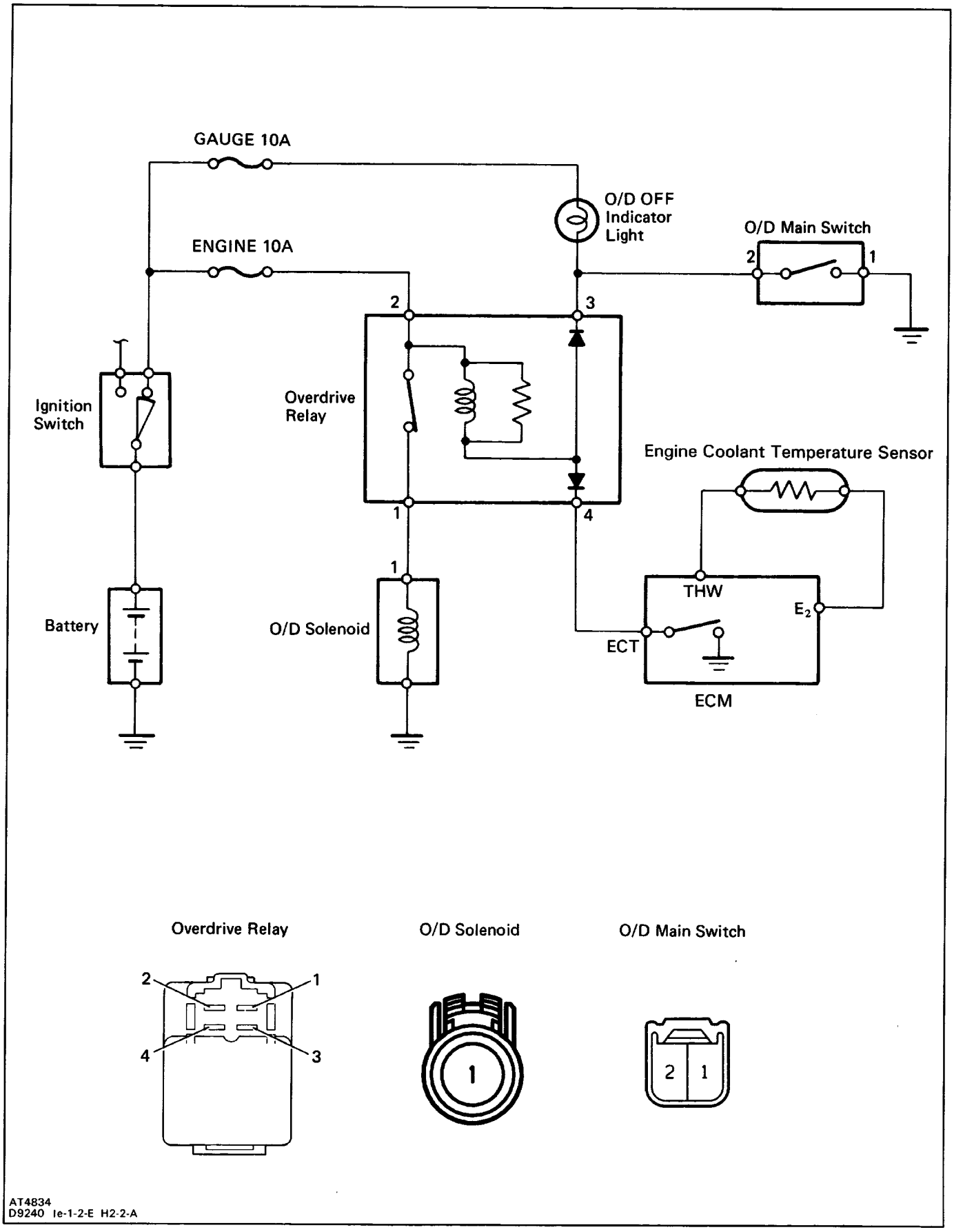

TROUBLESHOOTING FLOW–CHART

Trouble: No overdrive engagement with the main switch ON. (After warm–up)

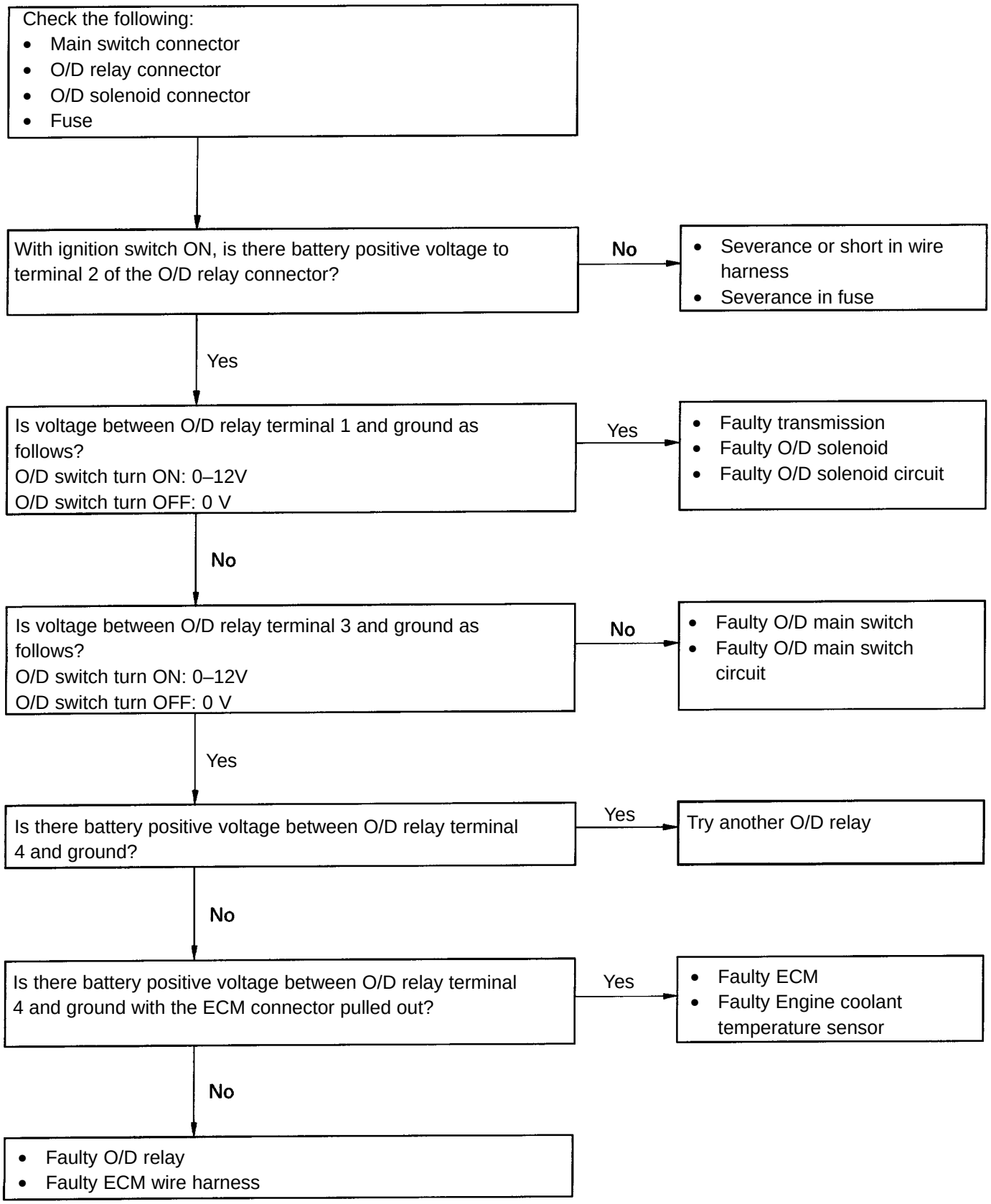

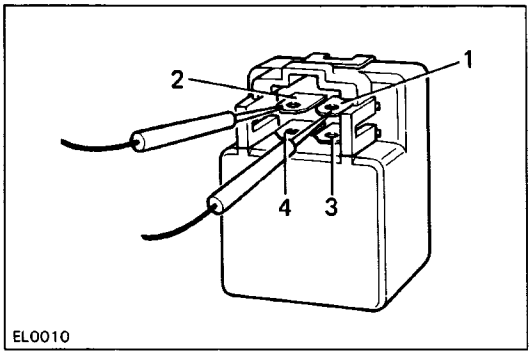

INSPECTION OF OVERDRIVE CONTROL COMPONENTS

1. INSPECT OVERDRIVE RELAY

(a) Remove the overdrive relay from the pedal bracket.

(b) Using an ohmmeter, check that there is continuity between terminals 1 and 2.

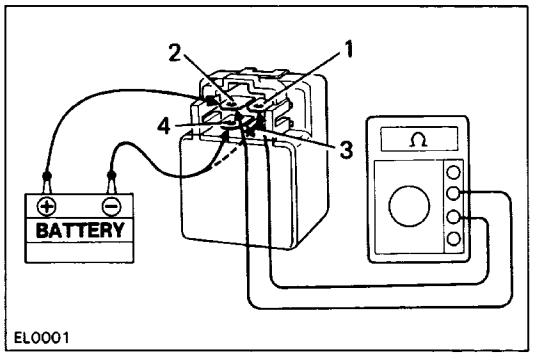

(c) Apply battery positive voltage to the relay terminals 2 and 3. Using an ohmmeter, check that there is no continuity between terminals 1 and 2.

(d) Apply battery positive voltage to the relay terminals 2 and 4. Using an ohmmeter, check that there is no continuity between terminals 1 and 2.

(e) Install the overdrive relay to the pedal bracket.

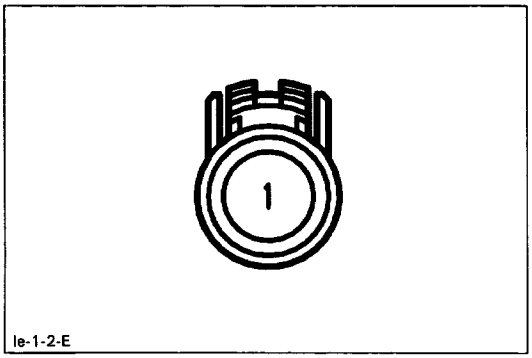

2. INSPECT OVERDRIVE SOLENOID

(a) Using an ohmmeter, measure the resistance be–tween terminal 1 and body.

Resistance: 11–15 9

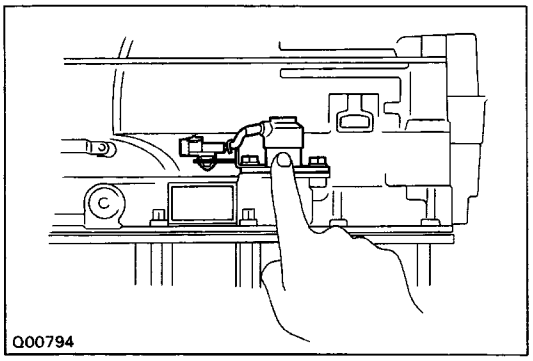

(b) Apply battery positive voltage to the solenoid. Check that the solenoid operation sound is heard**.**

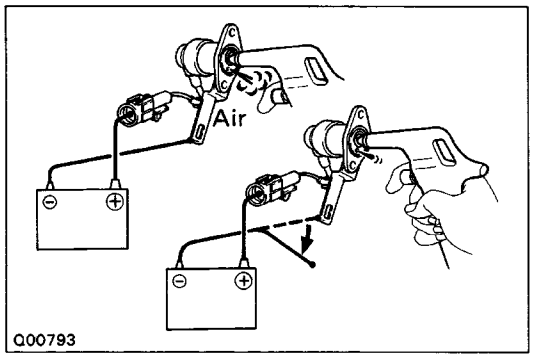

3. CHECK SOLENOID SEALS

If there is foreign material in the solenoid valve, there wil be no fluid control even with solenoid operation

(a) Check that the solenoid valve does not leak when low–pressure compressed air is applied.

(b) When supplying battery positive voltage to the sole–noid, check that the solenoid valve opens.

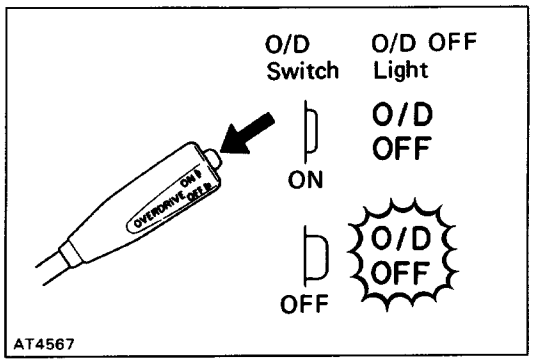

4. INSPECT–O/D OFF" INDICATOR

(a) Turn on the ignition switch.

(b) Check that the–O/D OFF" indicator does not light, when the O/D main switch is turned ON.

(c) Check that the–O/D OFF" indicator lights, when the O/D main switch is turned OFF.

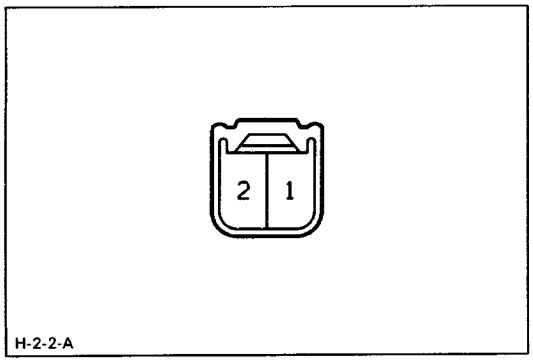

5. INSPECT OVERDRIVE MAIN SWITCH

(a) Remove the steering column cover.

(b) Using an ohmmeter, check the continuity of the ter–minals for each switch position.

Terminal / SW Position	1	2
ON		
OFF	O	O

6. INSPECT ENGINE COOLANT TEMPERATURE SENSOR (See page FI–115)

Mechanical System Tests

STALL TEST

The objective of this test is to check the overall performance of the transmission and engine by measuring the maximum engine speeds in the D and R positions.

NOTICE:

- **Perform the test at normal operating fluid temperature (50–80°C or 122–176°F).**
- **Do not continuously run this test longer than 5 seconds.**
- **To ensure safety, conduct this test in a wide, clear, level area, which provides good traction.**

MEASURE STALL SPEED

(a) Check the four wheels and fully apply the parking brake.
(b) Mount an engine tachometer.
(c) Keep your left foot pressed firmly on the brake pedal, and start the engine.
(d) Shift into the D position. Step all the way down on the accelerator pedal with your right foot.
Quickly read the highest engine RPM at this time.
Stall speed: 1,900 ±150 RPM
(e) Perform the same test in the R position.

EVALUATION

(a) If the engine speed is the same for both positions but lower than specified value:
Engine output may be insufficient
Stator one–way clutch is not operating properly

HINT: If more than 600 RPM below the specified value, the torque converter clutch could be faulty.

(b) If the stall speed at the D position is higher than specified:
Line pressure too low
Front clutch slipping
No.2 one–way clutch not operating properly
O/D one–way clutch not operating properly
(c) If the stall speed at the R position is higher than specified:
Line pressure too low
Rear clutch slipping
No.3 brake slipping
O/D one–way clutch not operating properly
(d) If the stall speed in both R and D positions are higher than specified:
Line pressure too low
Improper fluid level
O/D one–way clutch not operating properly

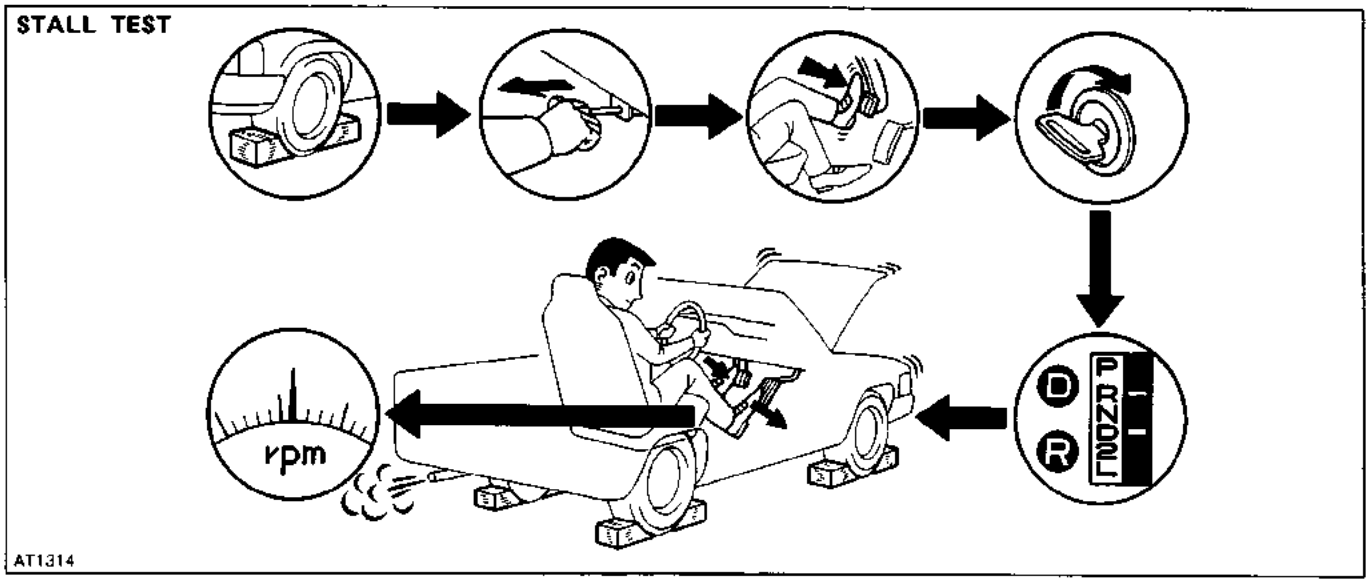

TIME LAG TEST

When the shift lever is shifted while the engine is idling, there will be a certain time lapse or lag before the shock can be felt. This is used for checking the condition of the O/D direct clutch, front clutch, rear clutch and No.3 brake.

NOTICE:

- **Perform the test at normal operating fluid temperature (50–80°C or 122–176°F).**
- **Be sure to allow one minute interval between tests.**
- **Make three measurements and take the average value.**

MEASURE TIME LAG

(a) Fully apply the parking brake.

(b) Start the engine and check the idle speed.

Idle speed: 750 RPM

(N position)

(c) Shift the shift lever from N to D position. Using a stop watch, measure the time it takes from shifting the lever until the shock is felt.

Time lag: Less than 1.2 seconds

(d) In same manner, measure the time lag for N–R.

Time lag: Less than 1.5 seconds

EVALUATION

(a) If N–) D time lag is longer than specified:

Line pressure too low

Front clutch worn

O/D one–way clutch not operating properly

(b) If N–R time lag is longer than specified:

Line pressure too low

Rear clutch worn

No.3 brake worn

O/D one–way clutch not operating properly

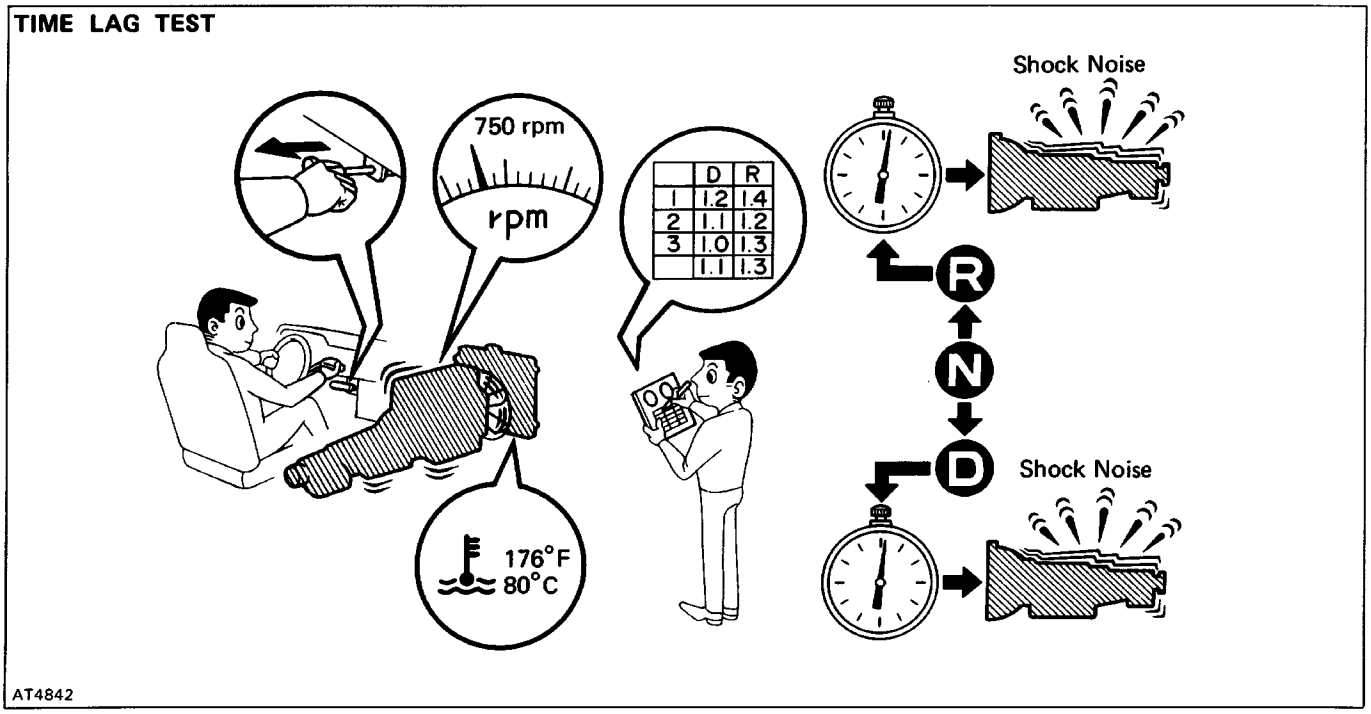

HYDRAULIC TEST

1. PREPARATION

(a) Warm up the transmission fluid.

(b) Remove the transmission case test plug and connect the hydraulic pressure gauge.

SST 09992–00094 (Oil pressure gauge)

NOTICE: Perform the test at normal operating fluid temperature (50–80°C or 122–176°F).

2. MEASURE LINE PRESSURE

(a) Fully apply the parking brake and chock the four wheels.

(b) Start the engine and check the idle speed.

(c) Shift into the D position, keep your left foot pressed firmly on the brake pedal and while manipu–lating the accelerator pedal with the right foot, measure the line pressure at the engine speeds specified in the table.

(d) In the same manner, perform the test in the R position.

kPa (kgf/cm2,psi)

D position		R position	
Idling	Stall	Idling	Stall
441 – 500 (4.5 – 5.1, 64 – 73)	990 – 1,167 (10.1 – 11.9, 144 – 169)	667 – 745 (6.8 – 7.6, 97 – 108)	1,471 – 1,863 (15.0 – 19.0, 213 – 270)

If the measured pressures are not up to specified values, recheck the throttle cable adjustment and retest.

EVALUATION

(a) If the measured values at all positions are higher than specified:

Throttle cable out of adjustment
Throttle valve defective
Regulator valve defective

(b) If the measured values at all positions are lower than specified:

Throttle cable out of adjustment
Throttle valve defective
Regulator valve defective
Oil pump defective
O/D direct clutch defective

(c) If pressure is low in the D position only:

D position circuit fluid leakage
Front clutch defective

(d) If pressure is low in the R position only:

R position circuit fluid leakage
No.3 brake defective
Rear clutch defective

LINE PRESSURE TEST

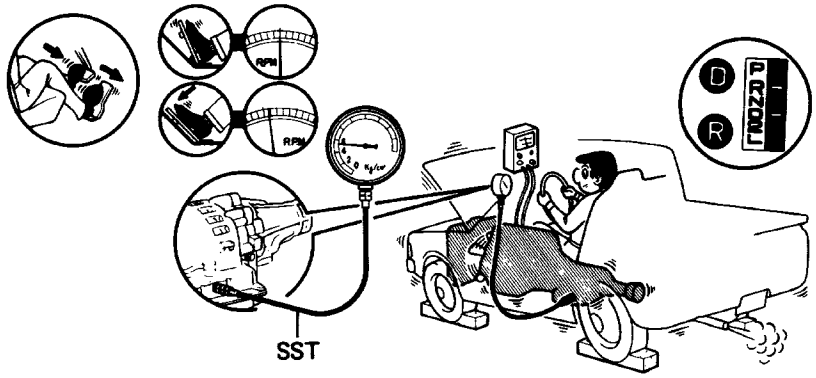

AT4260

3. MEASURE GOVERNOR PRESSURE

(a) Check the parking brake to see that it is not applied.

(b) Start the engine.

(c) Shift into the D position and measure the governor pressure at the speeds specified in the table.

EVALUATION

If governor pressure is defective:

Line pressure defective

Fluid leakage in governor pressure circuit

Governor valve operation defective

Output shaft	Vehicle speed (Reference only)		Governor pressure
	P195175R14	P205/75R 14	
1,000 RPM	32 km/h (20 mph)	32 km/h (20 mph)	88 – 147 kPa (0.9 – 1.5 kgf/cm^2, 13 – 21 psi)
1,800 RPM	57 km/h (35 mph)	58 km/h (36 mph)	157 – 216 kPa (1.6 – 2.2 kgf/cm^2, 23 – 31 psi)
3,500 RPM	111 km/h (69 mph)	113 km/h (70 mph)	402 – 520 kPa (4.1 – 5.3 kgf/cm^2, 58 – 75 psi)

GOVERNOR PRESSURE TEST

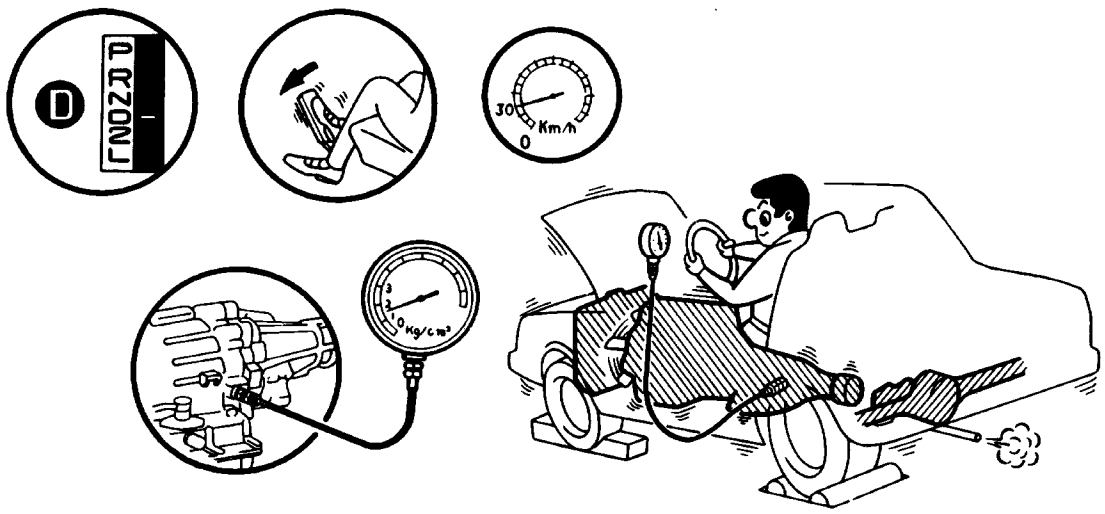

AT4487

ROAD TEST

NOTICE: Perform this test at normal fluid temperature (50–80°C or 122–176°F).

1. D POSITION TEST

Shift into the D position and while driving with the accel–erator pedal held constant at the throttle valve full open and the O/D switch ON, check on the following points:

(a) Check to see that the 1–2, 2–3 and 3–O/D up–shifts take place and also that the shift points conform to those shown in the automatic shift schedule.

HINT: 3–O/D up–shift does not take place with a throttle valve opening of more than 86% or engine cool–ant temperature below 50°C (122°F).

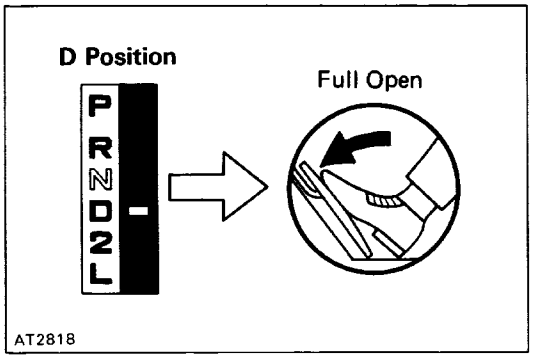

EVALUATION

(1) If there is no 1–2 up–shift:
Governor valve is defective
1–2 shift valve is stuck

(2) If there is no 2–3 up–shift:
2–3 shift valve is stuck

(3) If there is no 3–O/D up–shift (throttle valve open–ing less than 86%):
3–4 shift valve is stuck
Solenoid valve or circuit defective

(4) If the shift point is defective:
Throttle cable out of adjustment
Throttle valve, 1–2 shift valve, 2–3 shift valve, 3–4 shift valve etc., are defective

(b) In the same manner, check the shock and slip at 1–2, 2–3 and 3–O/D up–shifts.

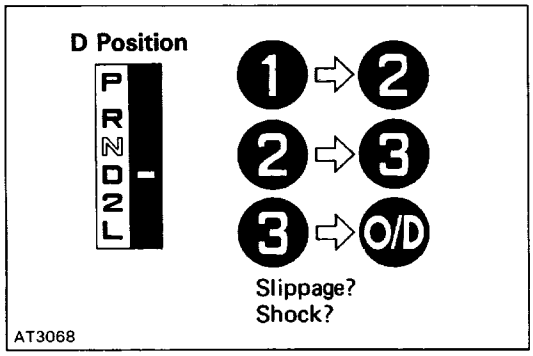

EVALUATION

If the shock is excessive:
Line pressure is too high
Accumulator is defective

(c) Run in the 3rd gear or O/D of D position and check for abnormal noise and vibration.

HINT: Check for cause of abnormal noise and vibration must be made with extreme care as they could also be due to unbalance in the propeller shaft, differential, tires, torque converter clutch, etc.

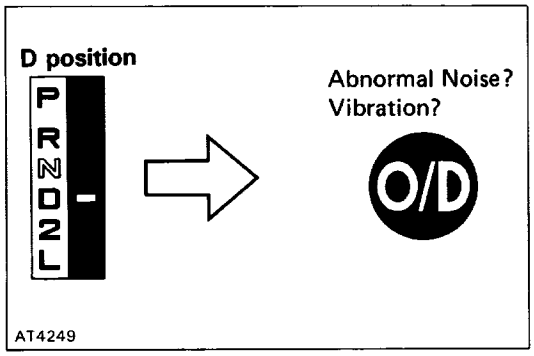

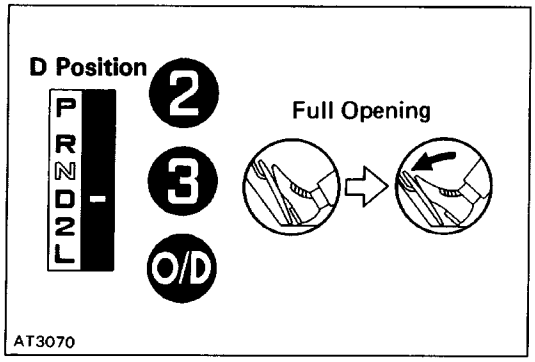

(d) While running in the D position, 2nd, 3rd and O/D gears, check to see that the possible kick–down ve–hicle speed limits for 2–1, 3–2 and O/D–3 kick–downs conform–to those indicated on the auto–matic shift schedule.

HINT: O/D–) 3 kick–down is always possible with a throttle valve opening of more than 86%.

(e) Check for abnormal shock and slip at kick–down.

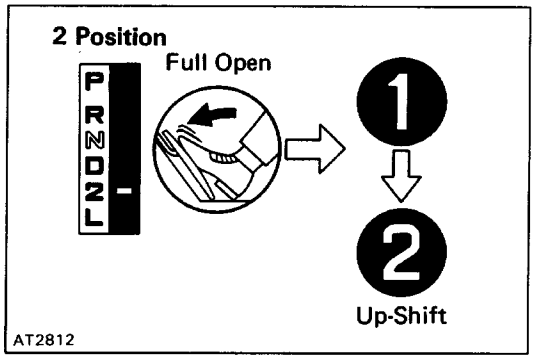

2. 2 POSITION TEST

Shift into the 2 position and, while driving with the accel–erator pedal held constantly at the full throttle valve opening position, check on the following points:

(a) Check to see that the 1–2 up–shift takes place and that the shift point conforms to it shown on the au–tomatic shift schedule.

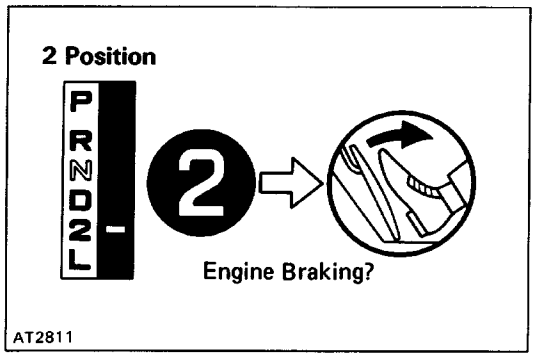

(b) While running in the 2 position and 2nd gear, release the accelerator pedal and check the engine braking effect.

EVALUATION

If there is no engine braking effect:

- No. 1 brake is defective

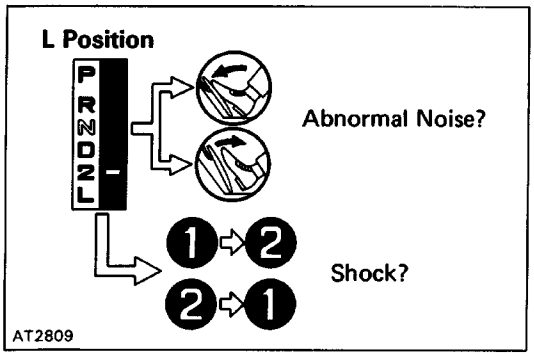

(c) Check for abnormal noise at acceleration and decel–eration, and for shock at up–shift and down–shift.

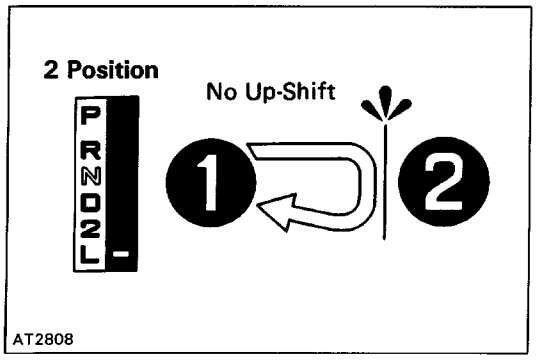

3. L POSITION TEST

(a) While running in the L position, check to see that there is no up–shift to 2nd gear.

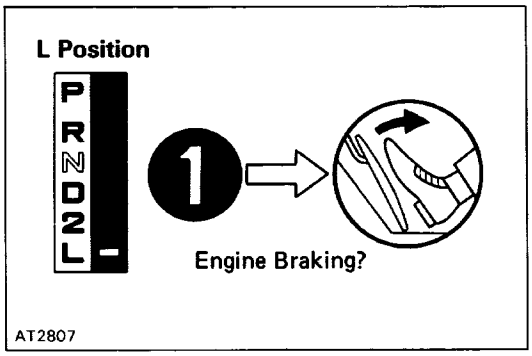

(b) While running in the L position, release the accelera–tor pedal and check the engine braking effect.

EVALUATION

If there is no engine braking effect:

- No–3 brake is defective

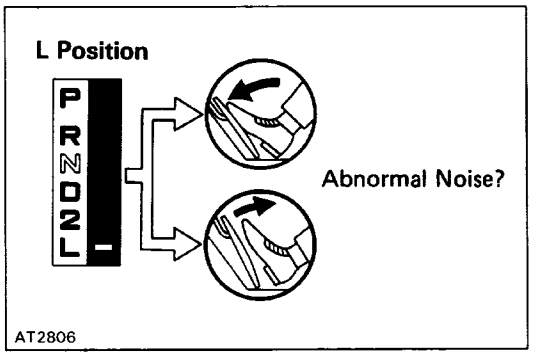

(c) Check for abnormal noise during acceleration and deceleration.

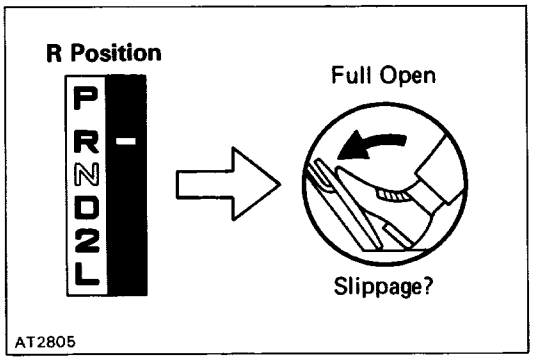

4. R POSITION TEST

Shift into the R position and, while starting at wide open throttle, check for slipping.

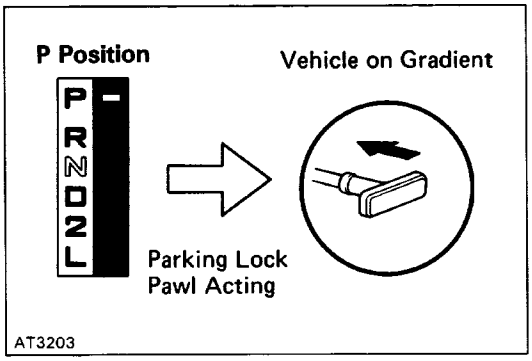

5. P POSITION TEST

Stop the vehicle on a gradient (more than 5°) and after shifting into the P position, release the parking brake. Then check to see that the parking lock pawl holds the vehicle in place.

Automatic Shift Schedule

Throttle valve fully open		[ ]Fully closed				km/h (mph)
D position (2 position)						L position
1 → 2	2 → 3	[3 → O/D]	O/D → 3	3 → 2	2 → 1	2 → 1
57 – 73 (35 – 45)	106 – 124 (66 – 77)	38 – 52 (24 – 32)	*	95 – 112 (59 – 70)	36 – 49 (22 – 30)	46 – 62 (29 – 39)

* O/D–¿ 3 down–shift is possible up to maximum speed.

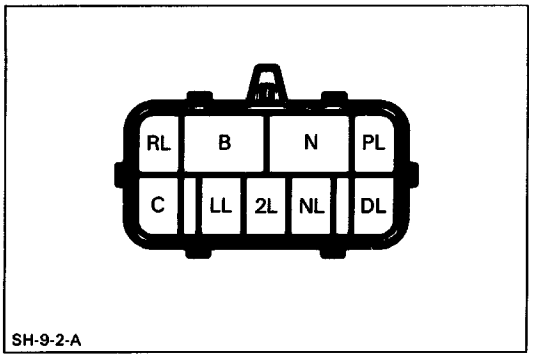

Park/Neutral Position Switch INSPECTION OF PARK/NEUTRAL POSITION SWITCH

Inspect that there is continuity between each terminals.

Shift Position \ Terminal	B	N	PL	RL	NL	DL	2L	LL	C
P	○	○	○						○
R				○					○
N	○	○			○				○
D						○			○
2							○		○
L								○	○

Automatic Shift Schedule

Throttle valve fully open		[ ]Fully closed				km/h (mph)
D position (2 position)						L position
1 → 2	2 → 3	[3 → O/D]	O/D → 3	3 → 2	2 → 1	2 → 1
57 – 73 (35 – 45)	106 – 124 (66 – 77)	38 – 52 (24 – 32)	*	95 – 112 (59 – 70)	36 – 49 (22 – 30)	46 – 62 (29 – 39)

* O/D–¿ 3 down–shift is possible up to maximum speed.

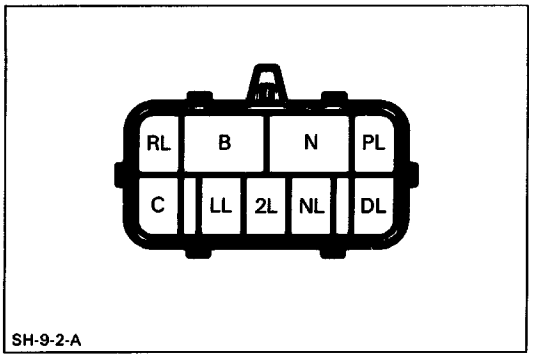

Park Neutral Position Switch

INSPECTION OF PARK/NEUTRAL POSITION SWITCH

Inspect that there is continuity between each terminals.

Shift Position \ Terminal	B	N	PL	RL	NL	DL	2L	LL	C
P	○	○	○						○
R				○					○
N	○	○			○				○
D						○			○
2							○		○
L								○	○

ON–VEHICLE REPAIR

Valve Body

REMOVAL OF VALVE BODY

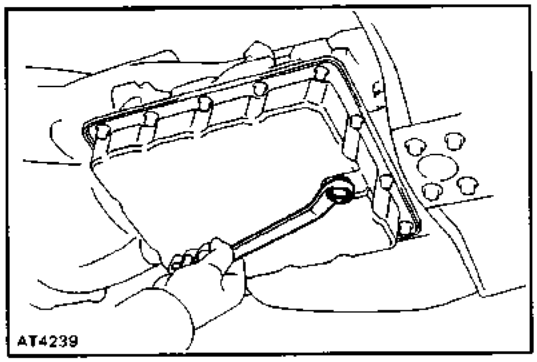

1. CLEAN TRANSMISSION EXTERIOR

To prevent contamination, clean the exterior of the trans–mission.

2. DRAIN TRANSMISSION FLUID

Remove the drain plug and the fluid into a suitable con–tainer.

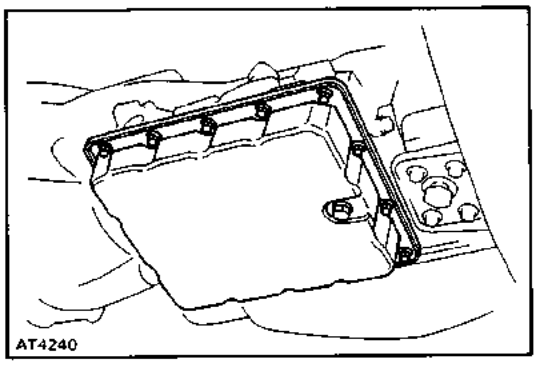

3. REMOVE OIL PAN, FILLER TUBE AND GASKET

NOTICE: Some fluid will remain in the oil pan. Be careful not to damage the filler tube and O–ring.

Remove all pan bolts, and carefully remove the pan as–sembly. Discard the gasket.

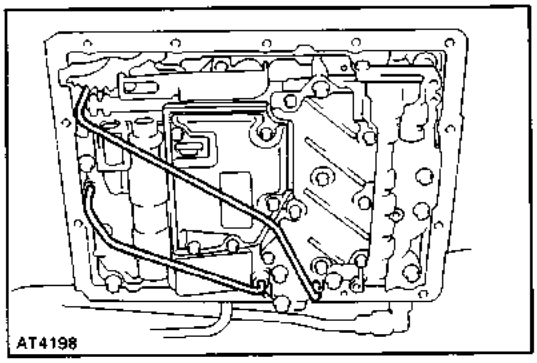

4. REMOVE OIL TUBES

Pry up both tube ends with a large screwdriver and re–move the tubes.

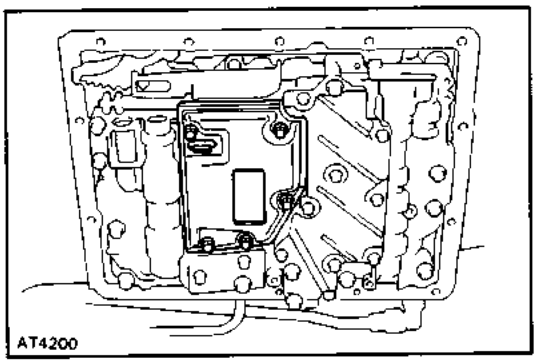

5. REMOVE OIL STRAINER

Remove the six bolts, and the oil strainer.

NOTICE: Be careful as some oil will come out with the filter.

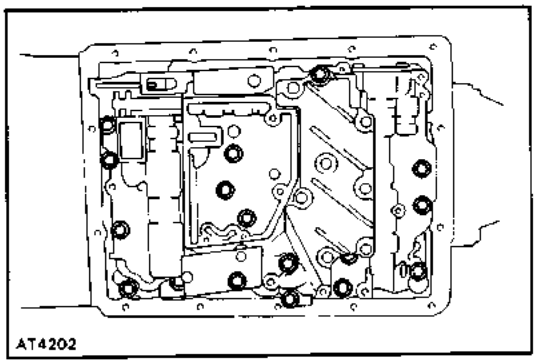

6. REMOVE VALVE BODY

(a) Remove the seventeen bolts.

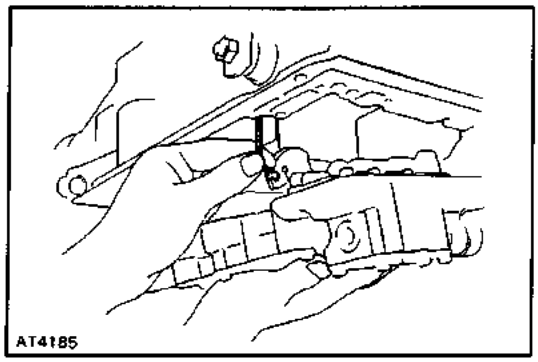

(b) Disconnect the throttle cable from the cam and re–move the valve body.

INSTALLATION OF VALVE BODY

1. CONNECT THROTTLE CABLE TO CAM

Push the cable fitting into the cam.

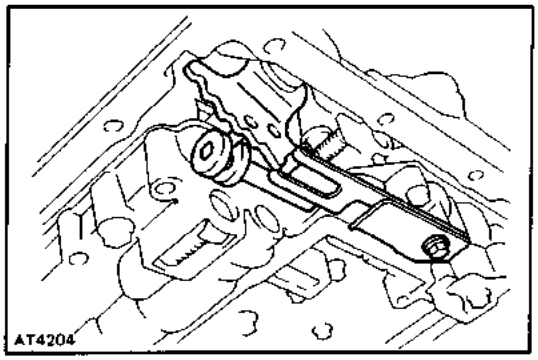

2. INSTALL VALVE BODY

(a) Align the manual valve lever with the manual valve.

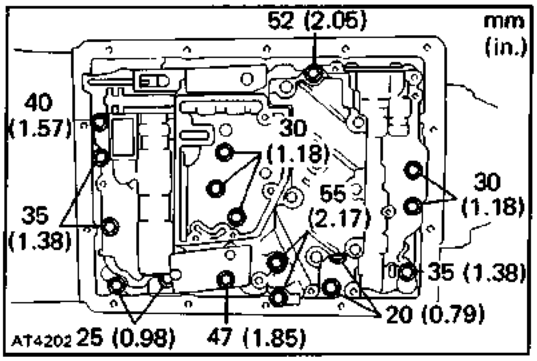

(b) Finger tighten the all bolts first. Then tighten the bolts evenly.

HINT: Each bolt length (mm, in.) is indicated in the fig–ure.

Torque: 10 N–m (100 kgf–cm, 7 ft–lbf)

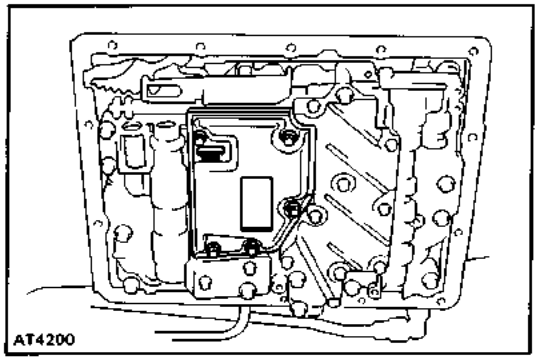

3. INSTALL OIL STRAINER

Be sure the screen is clean. Torque the bolts.

Torque: 5.4 N–m (55 kgf–cm, 48 in.¿lbf)

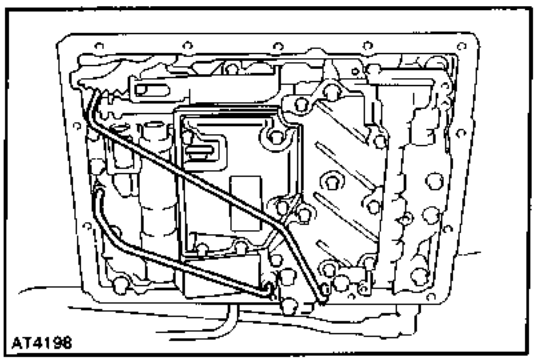

4. INSTALL OIL TUBES

Tap the tubes with a plastic hammer to install them into the positions in the figure.

NOTICE: Be careful not to bend or damage the tubes.

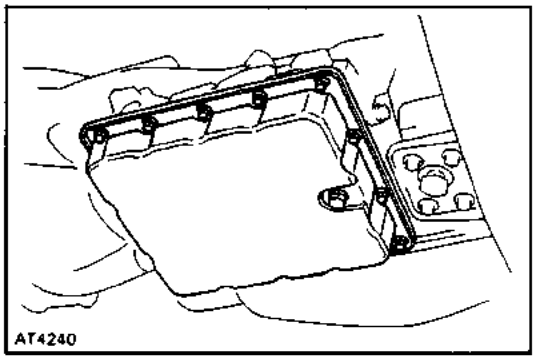

5. INSTALL PAN WITH NEW GASKET

Be sure the pan is clean and the two magnets are in place.

NOTICE: Do not use gasket sealer.

Tighten the bolts evenly.

Torque: 5.4 N–m (55 kgf–cm, 48 in.¿lbf)

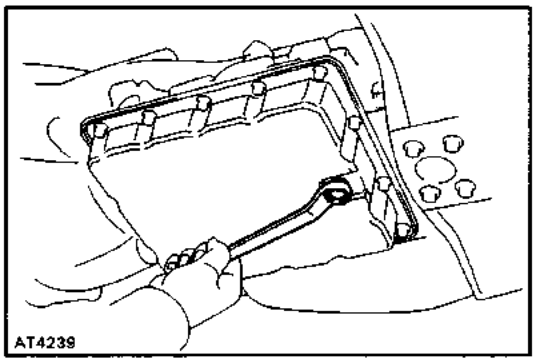

6. INSTALL DRAIN PLUG

Torque the drain plug.

Torque: 20 N–m (205 kgf–cm, 15 ft–lbf)

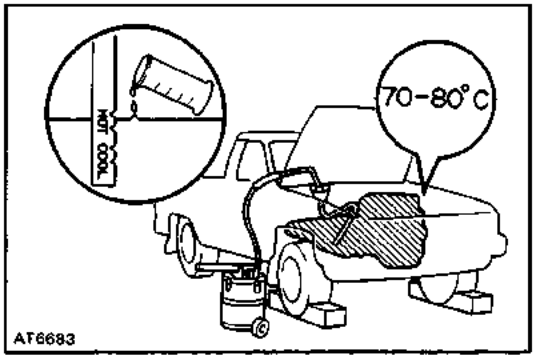

7. FILL TRANSMISSION WITH ATF

Add only about two liters of ATF. Start the engine and shift through all the positions. Check the fluid level and add as necessary.

NOTICE: Do not overfill.

Fluid type: ATF DEXRON¿II

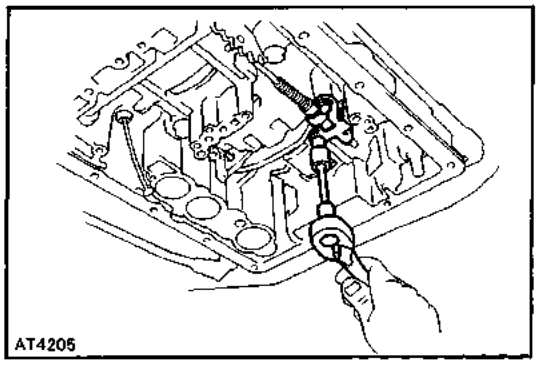

Parking Lock Pawl

REMOVAL OF PARKING LOCK PAWL

1. REMOVE VALVE BODY (See page AT–28)

2. REMOVE PARKING LOCK PAWL BRACKET

Remove the two bolts and the bracket.

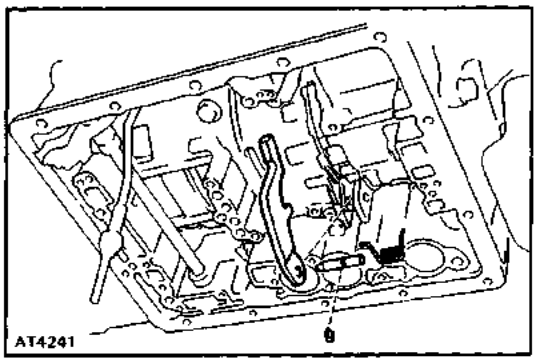

3. REMOVE SPRING FROM PARKING LOCK PAWL PIVOT PIN

4. REMOVE PIVOT PIN AND PARKING LOCK PAWL

INSTALLATION OF PARKING LOCK PAWL

1. INSTALL PARKING LOCK PAWL AND PIVOT PIN

2. INSTALL SPRING

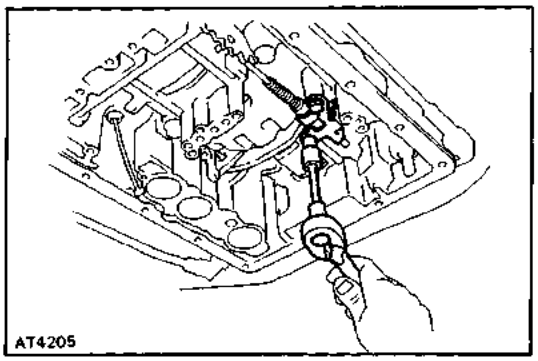

3. INSTALL VALVE BODY (See page AT–29)

(a) Push lock rod fully toward.

(b) Install the two bolts finger tight

(c) Check that the pawl operates smoothly.

(d) Torque the bolts.

Torque: 7.4 N.m (75 kgf.cm, 65 in.· lbf)

4. INSTALL VALVE BODY (See page AT–29)

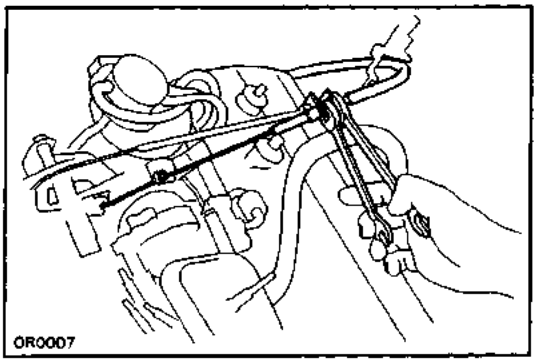

Throttle Cable

REMOVAL OF THROTTLE CABLE

1. DISCONNECT THROTTLE CABLE

(a) Disconnect the cable housing from the bracket.

(b) Disconnect the cable from the throttle linkage.

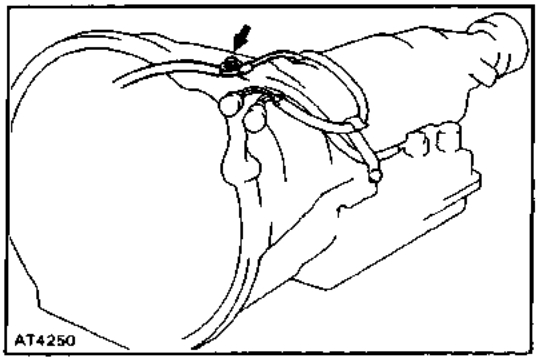

(c) Disconnect the cable from the torque converter clutch housing.

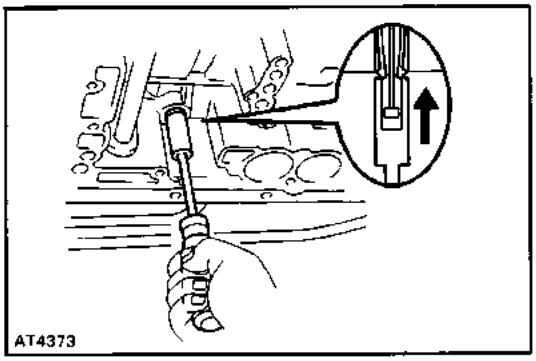

2. REMOVE VALVE BODY (See page AT–28)

3. PUSH THROTTLE CABLE OUT OF TRANSMISSION CASE

Using a 10–mm socket, push the throttle cable out.

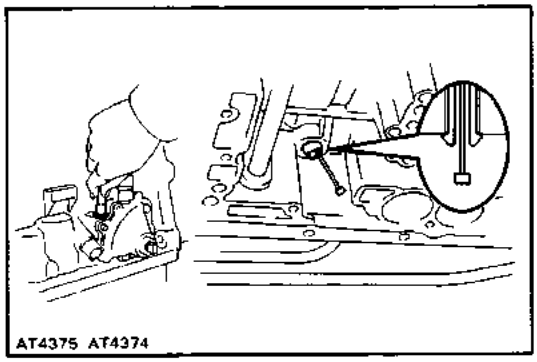

INSTALLATION OF THROTTLE CABLE

1. INSTALL CABLE IN TRANSMISSION CASE

Be sure to push it in all the way.

2. INSTALL VALVE BODY (See page AT–29)

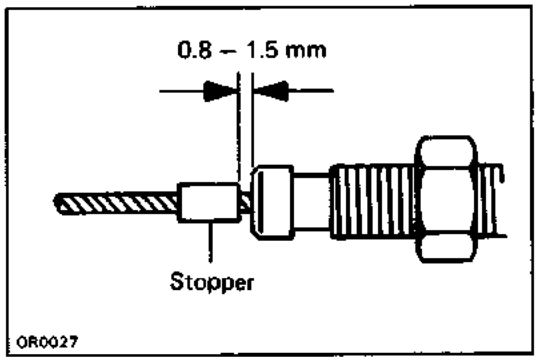

3. IF THROTTLE CABLE IS NEW, STAKE STOPPER ON INNER CABLE

(a) Pull the inner cable lightly until a slight resistance is felt, and hold it.

(b) Stake the stopper as shown, 0.8–1.5 mm (0.031 –0.059 in.) in width.

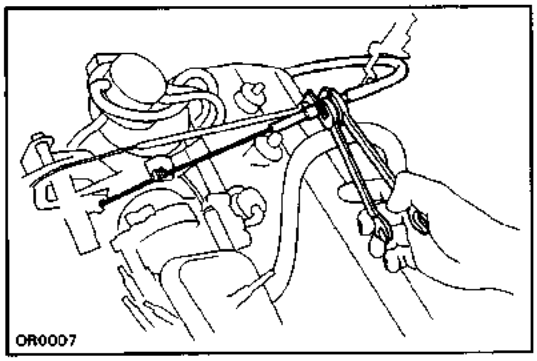

4. CONNECT THROTTLE CABLE

(a) Connect the cable to the throttle linkage.

(b) Connect the cable housing to the bracket.

(c) Connect the cable to the torque converter clutch housing.

5. ADJUST THROTTLE CABLE (See page AT–15)

6. TEST DRIVE VEHICLE

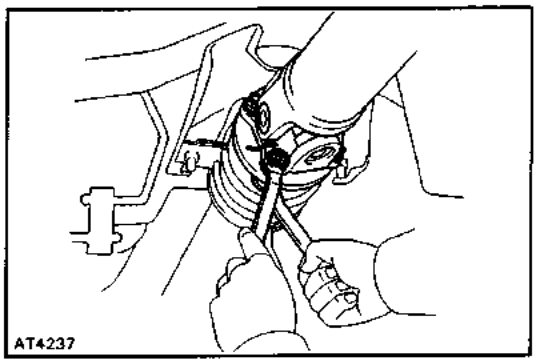

Extension Housing

REPLACEMENT OF OIL SEAL

1. **RAISE VEHICLE, AND POSITION PAN TO CATCH ANY FLUID THAT MAY DRIP**
2. **REMOVE PROPELLER SHAFT**

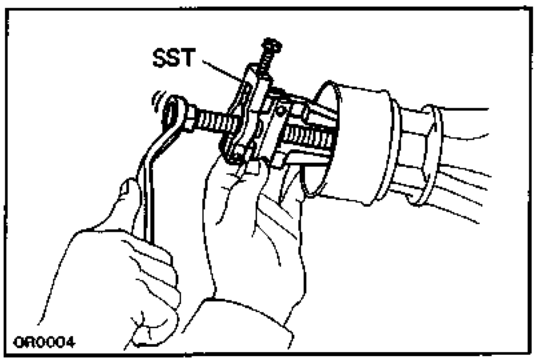

3. **REMOVE REAR OIL SEAL**
   NOTICE: Clean the rear extension housing before removing the seal.
   Using SST, remove the oil seal.
   SST 09308–10010

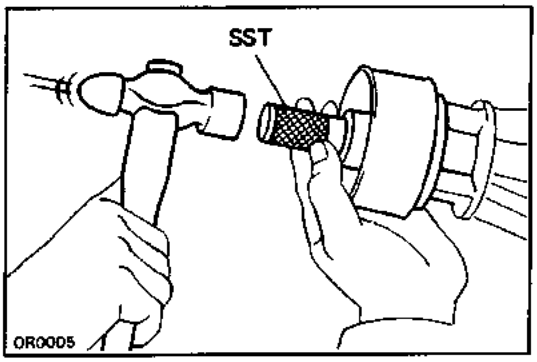

4. **INSTALL NEW OIL SEAL**
   Using SST, drive in a new oil seal as far as it will go.
   SST 0932 5–20010

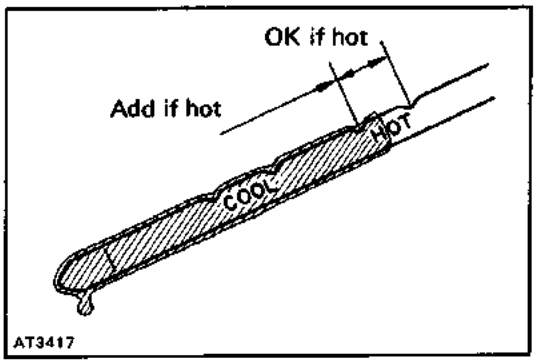

5. **INSTALL PROPELLER SHAFT**
6. **LOWER VEHICLE AND CHECK FLUID LEVEL**
   Start the engine, shift the shift lever into each position and, then check the fluid level with the transmission in P position.
   Add fluid as necessary.
   NOTICE: Do not overfill.
   Fluid type: ATF DEXRON®II

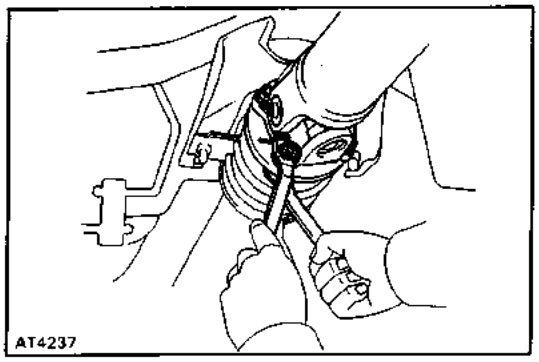

REMOVAL OF EXTENSION HOUSING

1. **RAISE VEHICLE AND POSITION PAN TO CATCH ANY FLUID THAT MAY DRIP**

2. **REMOVE PROPELLER SHAFT**

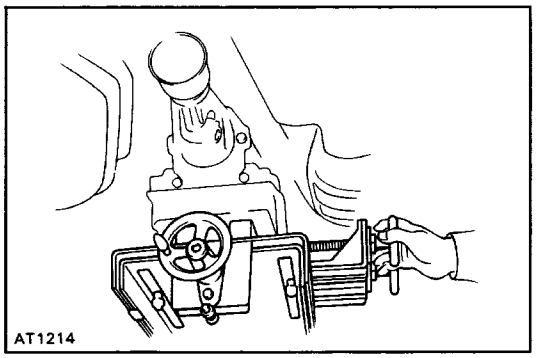

3. JACK UP TRANSMISSION SLIGHTLY

Securely support the transmission on a transmission jack. Lift the transmission slightly to remove weight from the rear support member.

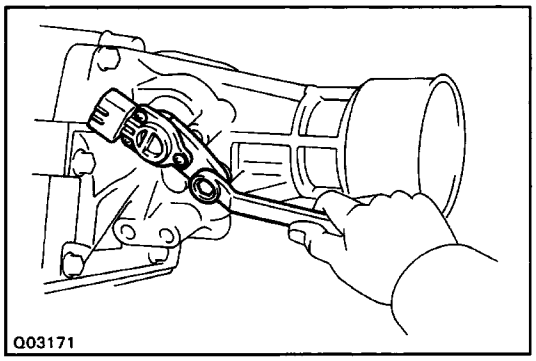

4. DISCONNECT CONNECTOR

5. REMOVE NO. 1 VEHICLE SPEED SENSOR

(a) Remove the bolt and the vehicle speed sensor.

(b) Remove the 0–ring from the sensor.

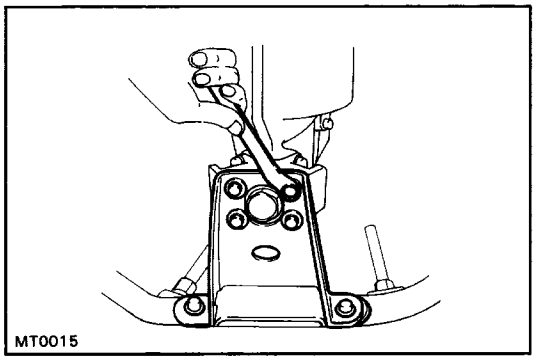

6. DISCONNECT ENGINE REAR MOUNTING FROM BRACKET

Remove four bolts from the bracket.

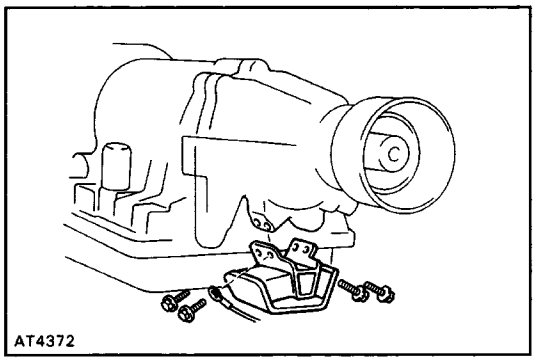

7. REMOVE ENGINE REAR MOUNTING FROM EXTENSION HOUSING

Remove four bolts and the engine rear mounting from the extension housing.

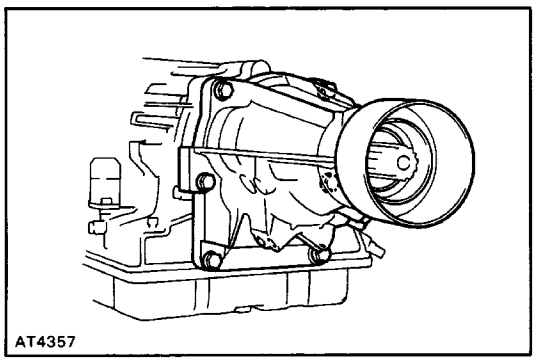

8. REMOVE EXTENSION HOUSING AND GASKET

Remove the six bolts. If necessary, tap the extension housing with a plastic hammer or wooden block to loosen it.

INSTALLATION OF EXTENSION HOUSING

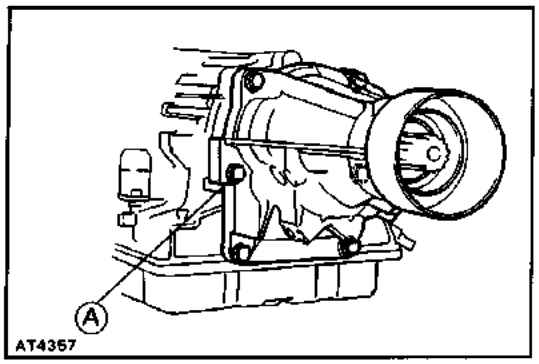

1. INSTALL NEW GASKET AND EXTENSION HOUSING ON TRANSMISSION

(a) Clean the threads of the¿¿bolt and bolt hole.

(b) Coat the threads of the¿¿bolt with sealant.

Sealant: Part No. 08833–00080, THREE BOND 1344, LOCTITE 242 or equivalent

(c) Install the extension housing over a new gasket with bolts, and then torque them.

HINT: The two lower bolts are shorter.

Torque: 34 N–m (345 kgf–cm, 25 ft–lbf)

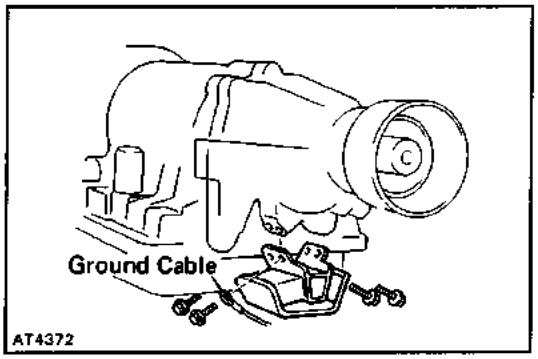

2. INSTALL ENGINE REAR MOUNTING

(a) Install the engine rear mounting to the extension housing. Tighten the four bolts.

Torque: 25 N–m (250 kgf–cm, 18 ft–lbf)

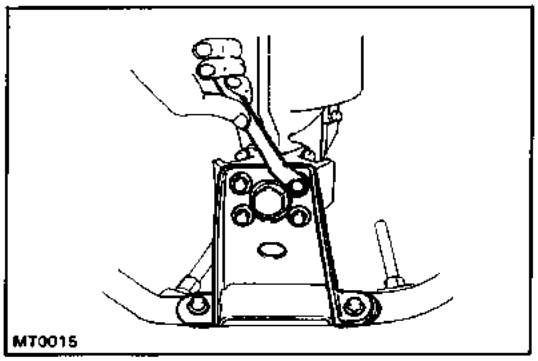

(b) Lower and rest the transmission on the mounting bracket.

(c) Connect the mounting to the bracket. Tighten the four bolts.

Torque: 13 N–m (130 kgf–cm, 9 ft–lbf)

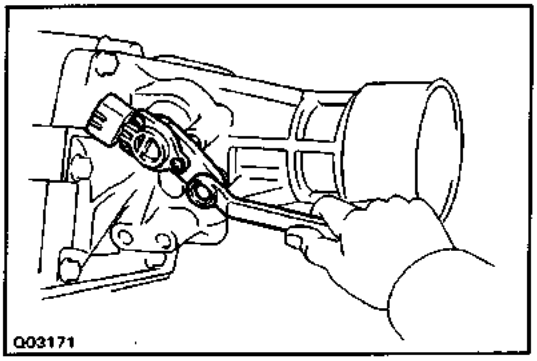

3. INSTALL PROPELLER SHAFT

4. INSTALL NO. 1 VEHICLE SPEED SENSOR

(a) Install a new O–ring on the sensor.

(b) Install the vehicle speed sensor with the bolt.

5. CONNECT CONNECTOR

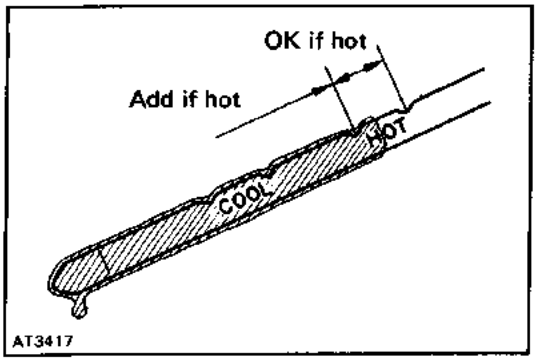

6. LOWER VEHICLE AND CHECK FLUID LEVEL

Start the engine, shift the shift lever into each position, and then check the fluid level with the transmission in P position.

Add fluid as necessary.

NOTICE: Do not overfill.

Fluid type: ATF DEXRON®II

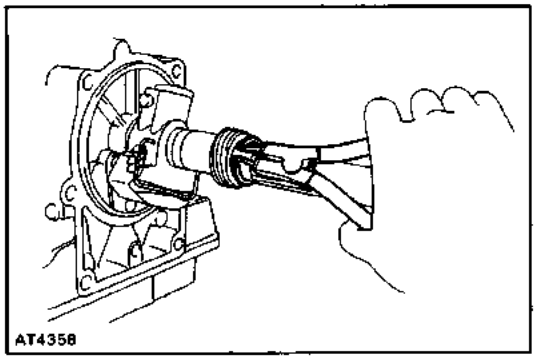

Governor Body

REMOVAL OF GOVERNOR BODY

1. REMOVE EXTENSION HOUSING (See page AT–33)

2. REMOVE SPEEDOMETER DRIVE GEAR

(a) Using snap ring pliers, remove the snap ring.
(b) Slide off the speedometer gear.
(e) Remove the lock ball and the outer snap ring.

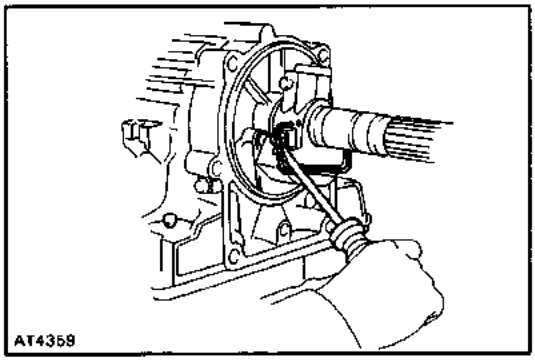

3. REMOVE GOVERNOR FROM OUTPUT SHAFT

(a) Using a large screwdriver, remove the retaining clip.

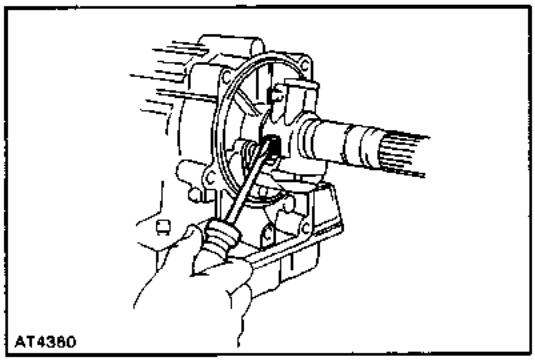

(b) Unstake the lock plate, remove the bolt and lock plate.
(c) Remove the governor body.

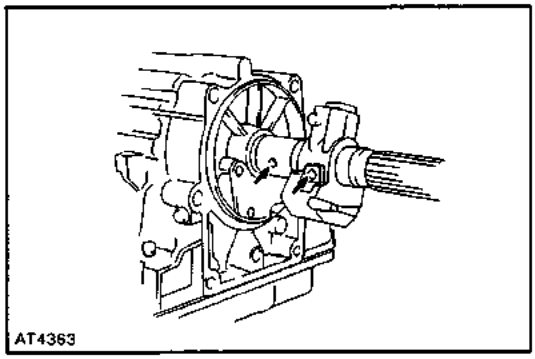

INSTALLATION OF GOVERNOR BODY

1. INSTALL GOVERNOR ON OUTPUT SHAFT

(a) Align the governor body and bolt hole on the output shaft.

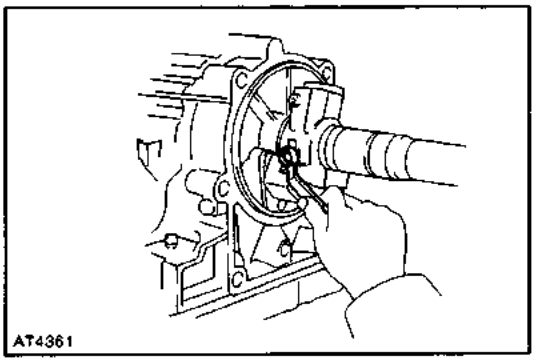

(b) Install the bolt and lock plate, stake the lock plate.
(c) Using a large screwdriver, install the retaining clip into the hole in the output shaft.
(d) Check that the governor assembly is secure.

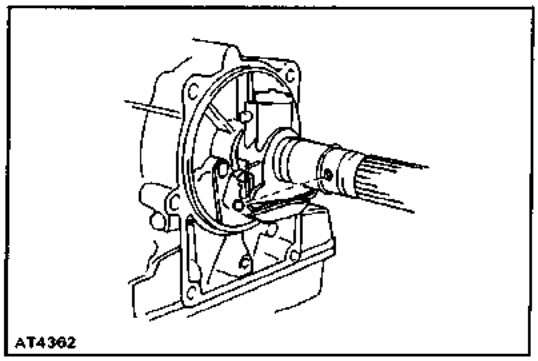

2. INSTALL SPEEDOMETER DRIVE GEAR

(a) Install the snap ring and lock ball.

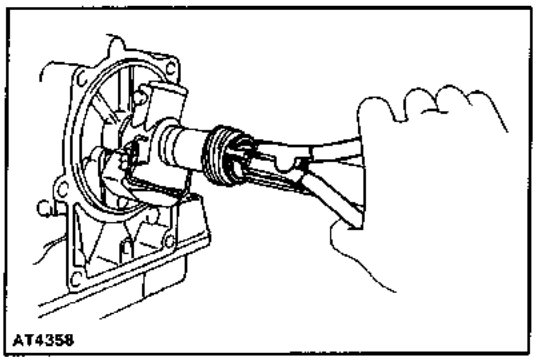

(b) Slide the speedometer drive gear on the shaft.

(c) Using snap ring pliers, install the outer snap ring.

3. INSTALL EXTENSION HOUSING (See page AT–34)

REMOVAL AND INSTALLATION OF TRANSMISSION

Remove and install the parts as shown.

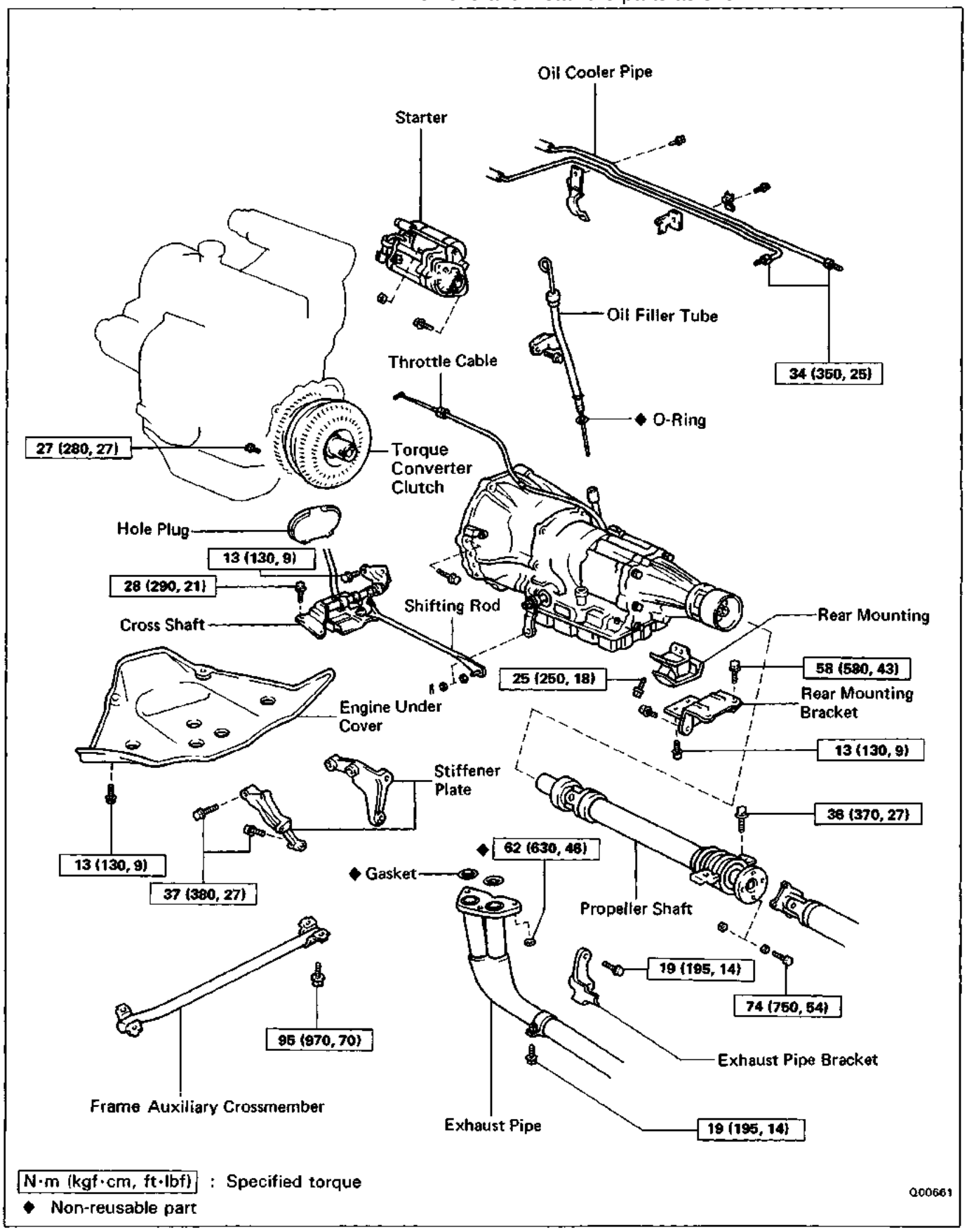

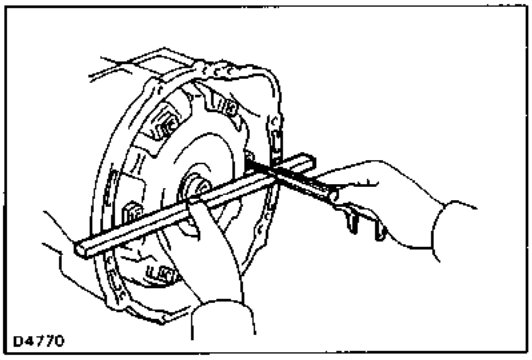

(MAIN POINT OF INSTALLATION)

1. CHECK TORQUE CONVERTER CLUTCH INSTALLATION

Using calipers and a straight edge, measure from the installed surface of the torque converter clutch to the front surface of the transmission housing.

Correct distance: 20.0 mm (0.787 in.)

If the distance is less than the standard, check for an improper installation**.**

2. ADJUST TRANSMISSION THROTTLE CABLE

(See page AT–15**)**

3. FILL TRANSMISSION WITH ATF AND CHECK FLUID LEVEL

Fluid type: ATF DEXRON® II

NOTICE: Do not overfill.

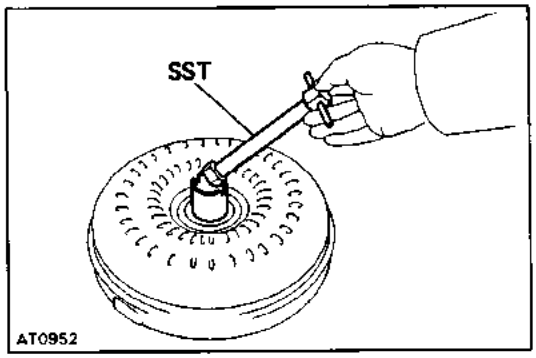

TORQUE CONVERTER CLUTCH AND DRIVE PLATE

INSPECTION OF TORQUE CONVERTER CLUTCH AND DRIVE PLATE

1. INSPECT ONE–WAY CLUTCH

(a) Install SST into the inner race of the one–way clutch.
SST 09350–20015 (09397–22020)

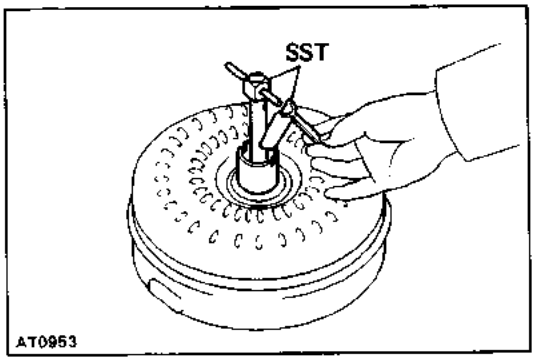

(b) Install SST so that it fits in the notch of the con–verter hub and outer race of the one–way clutch.
SST 09350–20015 (09397–22020)

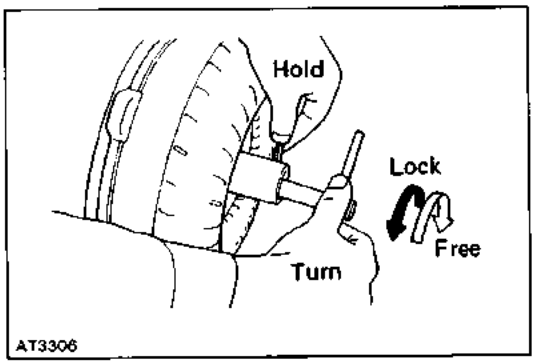

(c) With the torque converter clutch standing on its side, the clutch locks when turned counterclock–wise, and rotates freely and smoothly clockwise.
If necessary, clean the converter and retest the clutch.
Replace the converter if the clutch still fails the test.

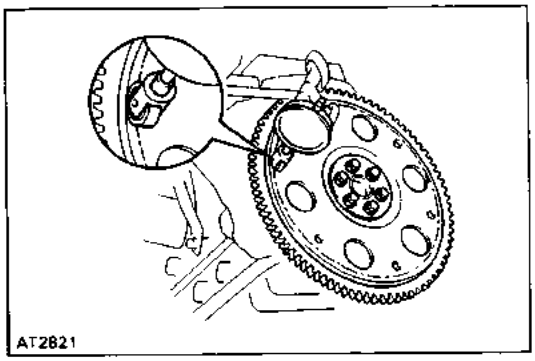

2. MEASURE DRIVE PLATE RUNOUT AND INSPECT RING GEAR

Set up a dial indicator and measure the drive plate runout.
If runout exceeds 0.20 mm (0.0079 in.) or if the ring gear is damaged, replace the drive plate. If installing a new drive plate, note the orientation of spacers and tighten the bolts.
Torque: 83 N–m (850 kgf–cm, 61 ft–lbf)

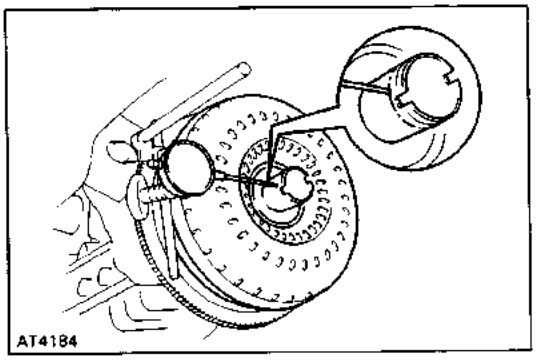

3. MEASURE TORQUE CONVERTER CLUTCH SLEEVE RUNOUT

(a) Temporarily mount the torque converter clutch to the drive plate. Set up a dial indicator.
If runout exceeds 0.30 mm (0.0118 in.), try to correct by reorienting the installation of the converter. If excessive runout cannot be corrected, replace the torque converter clutch.
HINT: Mark the position of the converter to ensure cor rect installation.
(b) Remove the torque converter clutch.

A340E Automatic Transmission

DESCRIPTION

General

The A340E is a 4–speed, Electronic Controlled Transmission developed for use with high–performance engine such as the 3VZ–E. A lock–up mechanism is built into the torque converter clutch.
The A340E automatic transmission is mainly composed of the torque converter clutch, the overdrive (hereafter called O/D) planetary gear unit, 3–speed planetary gear unit, the hydraulic control system and the electronic control system.

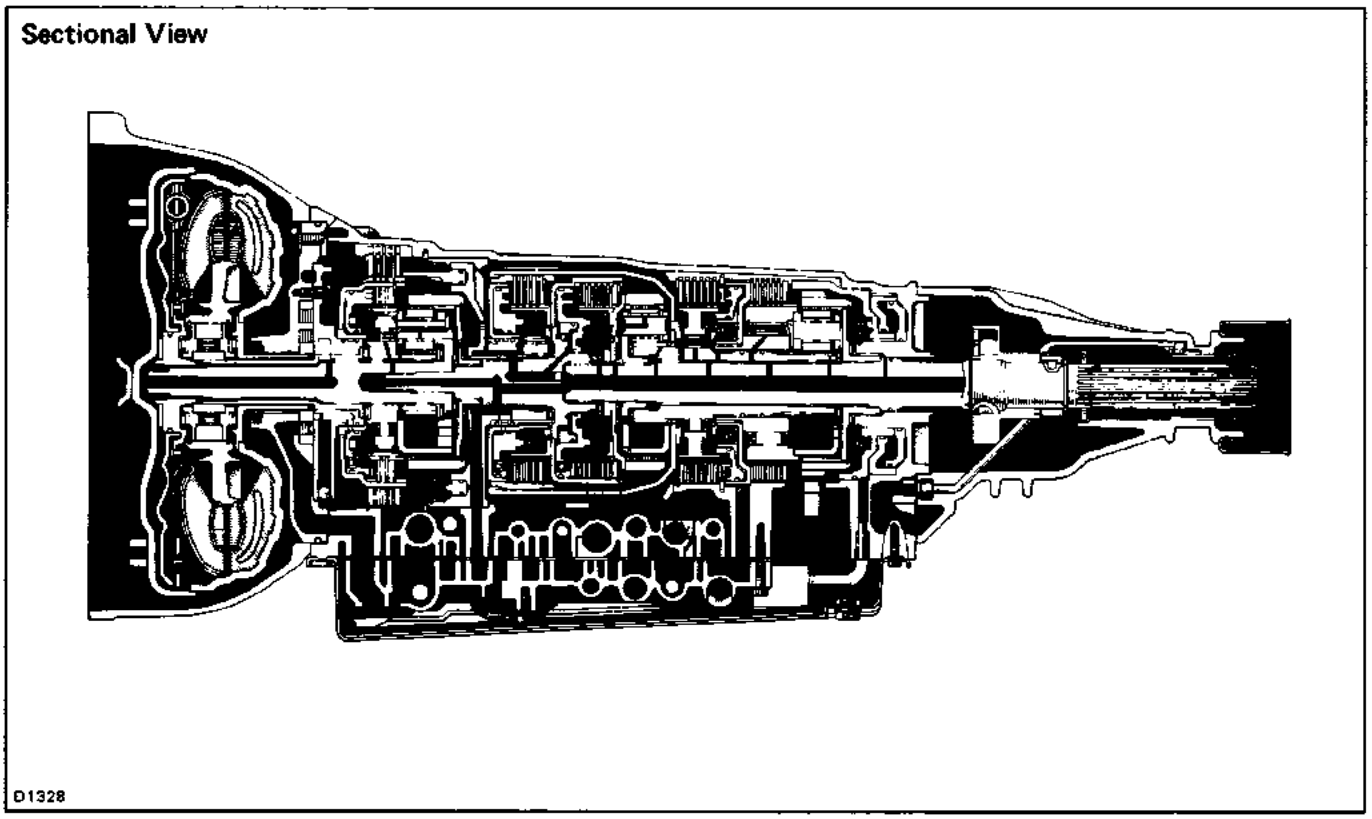

General Specifications

Type of Transmission			A340E
Type of Engine			3VZ-E
Torque Converter Clutch	Stall Torque Ratio		C&C 2.0 : 1 Others 2.1 : 1
	Lock–Up Mechanism		Equipped
Gear Ratio	1 st Gear		2.804
	2nd Gear		1.531
	3rd Gear		1.000
	O/D Gear		0.705
	Reverse Gear		2.393
Plates (Disc/Plate)	C_0	O/D Direct Clutch	2/2
	C_1	Forward Clutch	5/5
	C_2	Direct Clutch	4/4
	B_2	2nd Brake	5/5
	B_3	1 st & Reverse Brake	6/6
	B_0	O/D Brake	4/3
ATF	Type		ATF DEXRON® II
	Capacity liter (US qts, Imp.qts)	Total	7.2 (7.6, 6.3)
		Drain and Refill	1.6 (1.7, 1.4)

OPERATION

Mechanical Operation

OPERATING CONDITIONS

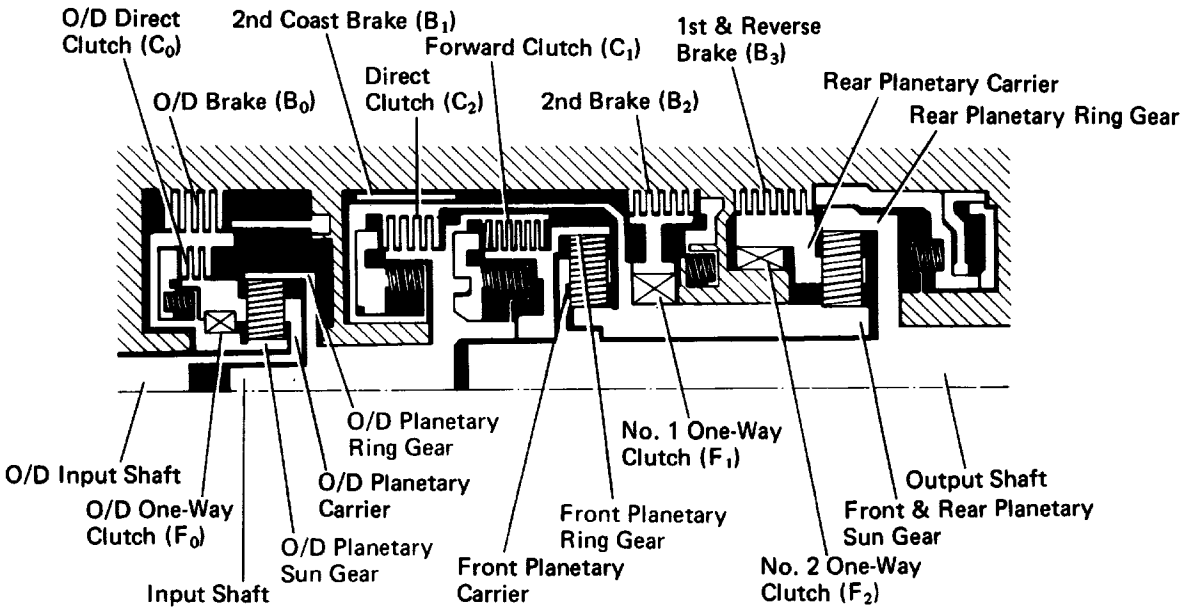

AT2157

○ ..... Operating

Shift lever position	Gear position	C_0	C_1	C_2	B_0	B_1	B_2	B_3	F_0	F_1	F_2
P	Parking	○									
R	Reverse	○		○				○	○		
N	Neutral	○									
D	1 st	○	○						○		○
	2nd	○	○				○		○	○	
	3rd	○	○	○			○		○		
	O/D		○	○	○		○				
2	1 st	○	○						○		○
	2nd	○	○			○	○		○	○	
	3rd	○	○	○			○		○		
L	1 st	○	○					○	○		○
	* 2nd	○	○			○	○		○	○	

* Down–shift only in the L position and 2nd gear–no up–shift.

FUNCTION OF COMPONENTS

NOMENCLATURE	OPERATION
O/D Direct Clutch (C_0)	Connects overdrive sun gear and overdrive carrier
O/D Brake (BO)	Prevents overdrive sun gear from turning either clockwise or counterclockwise
O/D One–Way Clutch (Fo)	When transmission is being driven by engine, connects overdrive sun gear and overdrive carrier
Forward Clutch (Cl)	Connects input shaft and front planetary ring gear
Direct Clutch (C2)	Connects input shaft and front & rear planetary sun gear
2nd Coast Brake (Bl)	Prevents front & rear planetary sun gear from turning either clockwise or counterclockwise
2nd Brake (BZ)	Prevents outer race of F, from turning either clockwise or counterclockwise, thus preventing front & rear planetary sun gear from turning counterclockwise
1 st & Reverse Brake (B3)	Prevents rear planetary carrier from turning either clockwise or counterclockwise
No. 1 One–Way Clutch (Fl)	When B2 is operating, prevents front & rear planetary sun gear from turning counterclockwise
No.2 One–Way Clutch (F2)	Prevents rear planetary carrier from turning counterclockwise

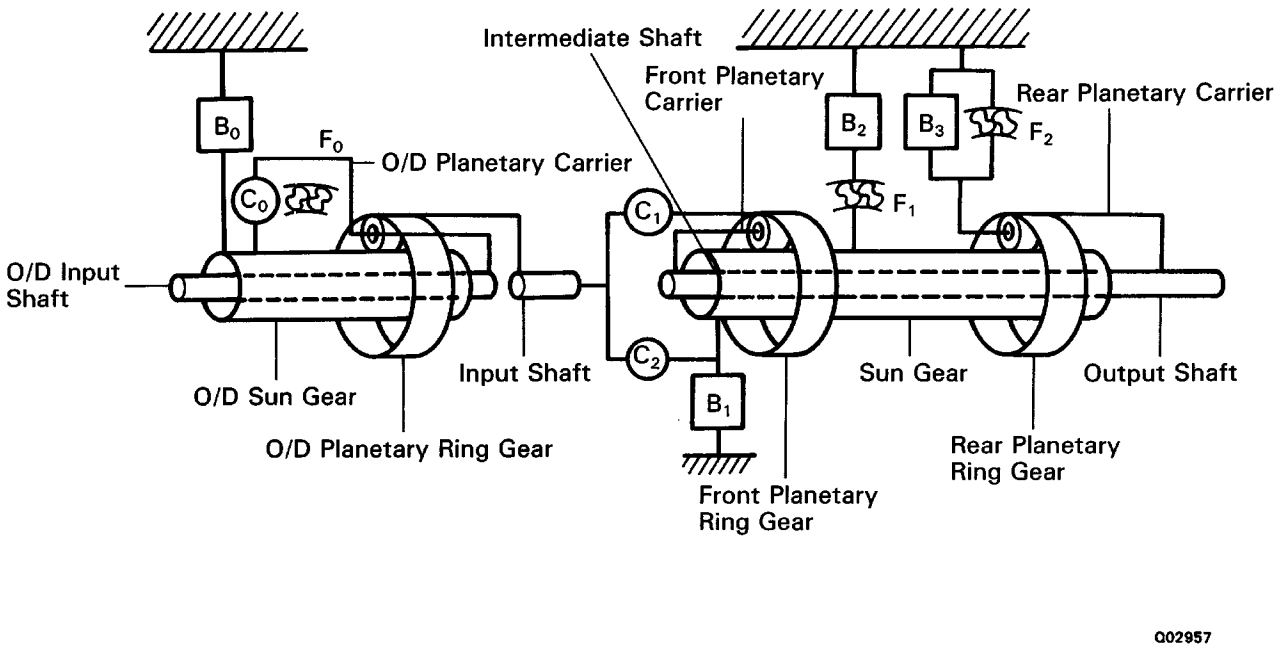

FUNCTION OF COMPONENTS (Cont'd)

The conditions of operation for each gear position are shown in the following illustrations:

D or 2 Position 1st Gear

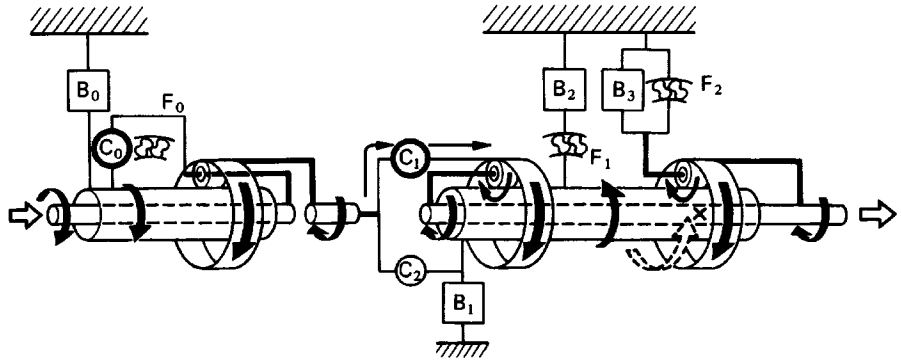

AT6675

D Position 2nd Gear

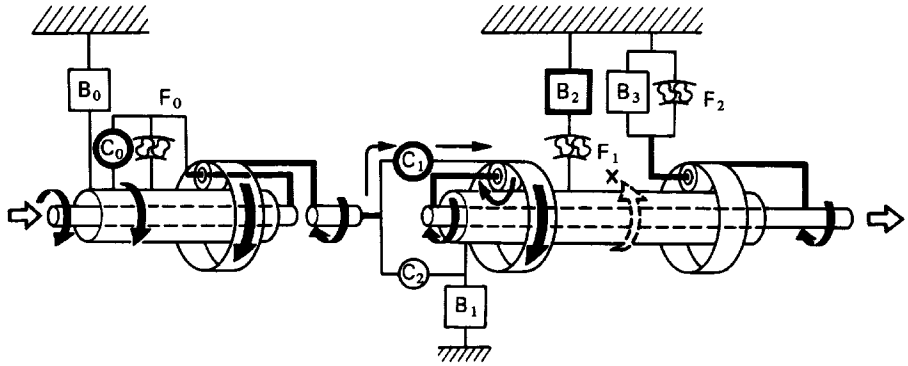

AT6676

D or 2 Position 3rd Gear

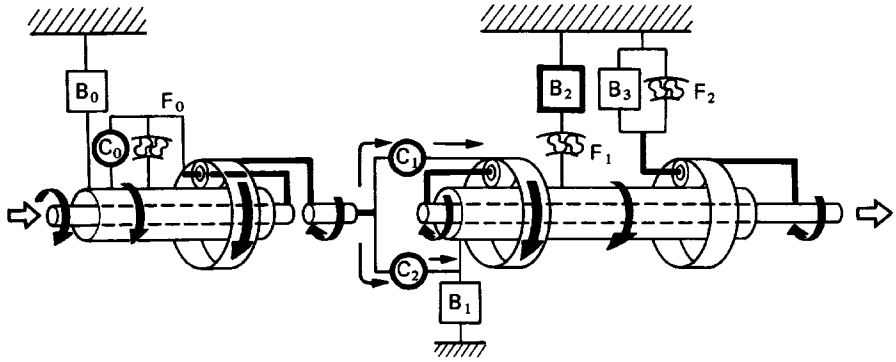

AT6677

D Position O/D

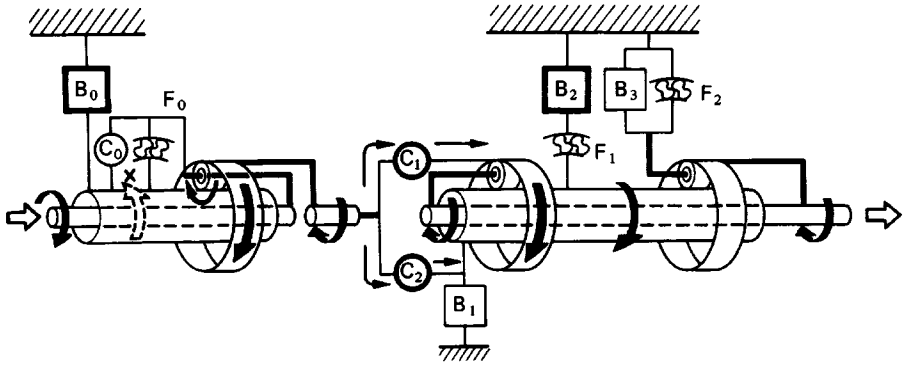

AT6678

FUNCTION OF COMPONENTS (Cont'd)

2 or L Position 2nd Gear

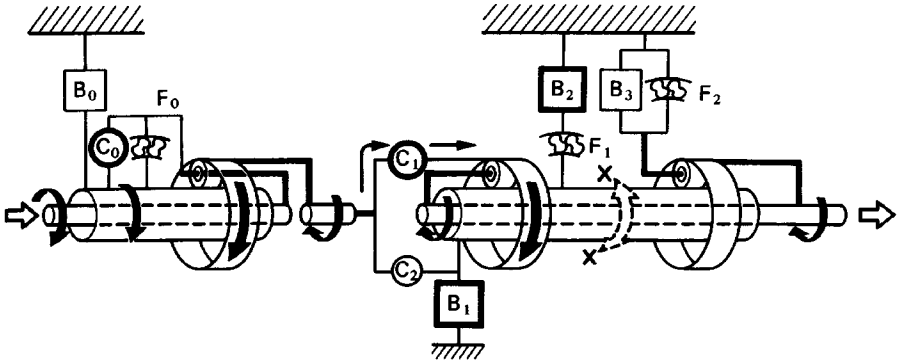

AT6679

L Position 1st Gear

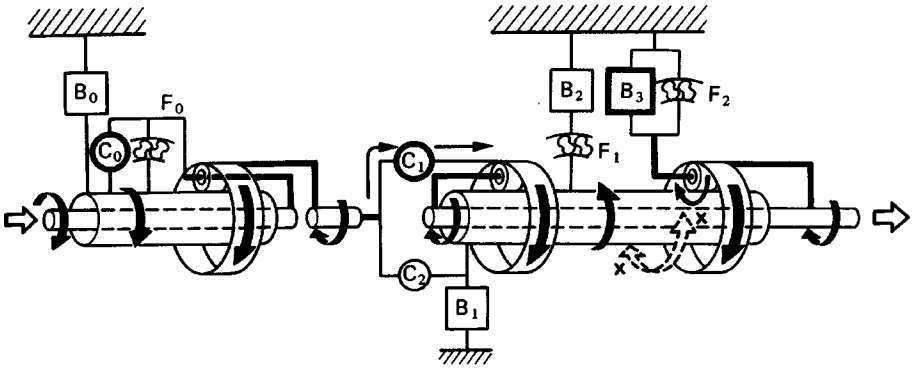

AT6680

R Position Reverse Gear

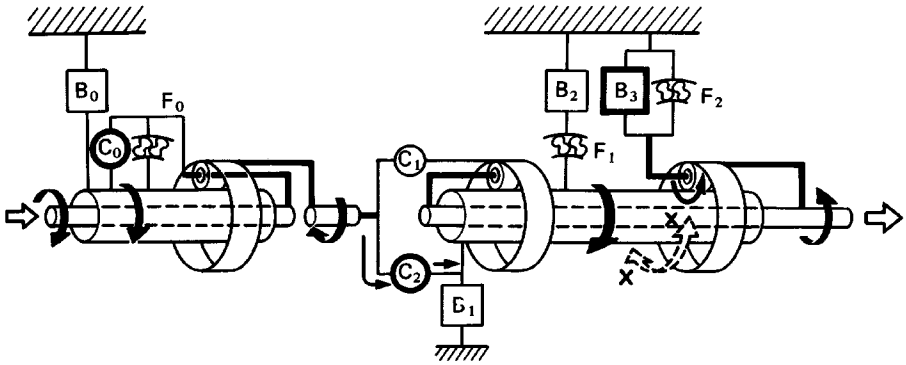

AT6681

HYDRAULIC CONTROL SYSTEM

The hydraulic control system is composed of the oil pump, the valve body, the solenoid valves, and the clutches and brakes, as well as the fluid passages which connect all of these components. Based on the hydraulic pressure created by the oil pump, the hydraulic control system governs the hydraulic pressure acting on the torque converter clutch, clutches and brakes in accordance with the vehicle driving condi–tions.

There are three solenoid valves on the valve body. These solenoid valves are turned on and off by signals from the ECM to operate the shift valves. These shift valves then switch the fluid passages so that fluid goes to the torque converter clutch and planetary gear units.

(Except for the solenoid valves, the hydraulic control system of the electronic controlled transmission is ba–sically the same as that of the fully hydraulic controlled automatic transmission.)

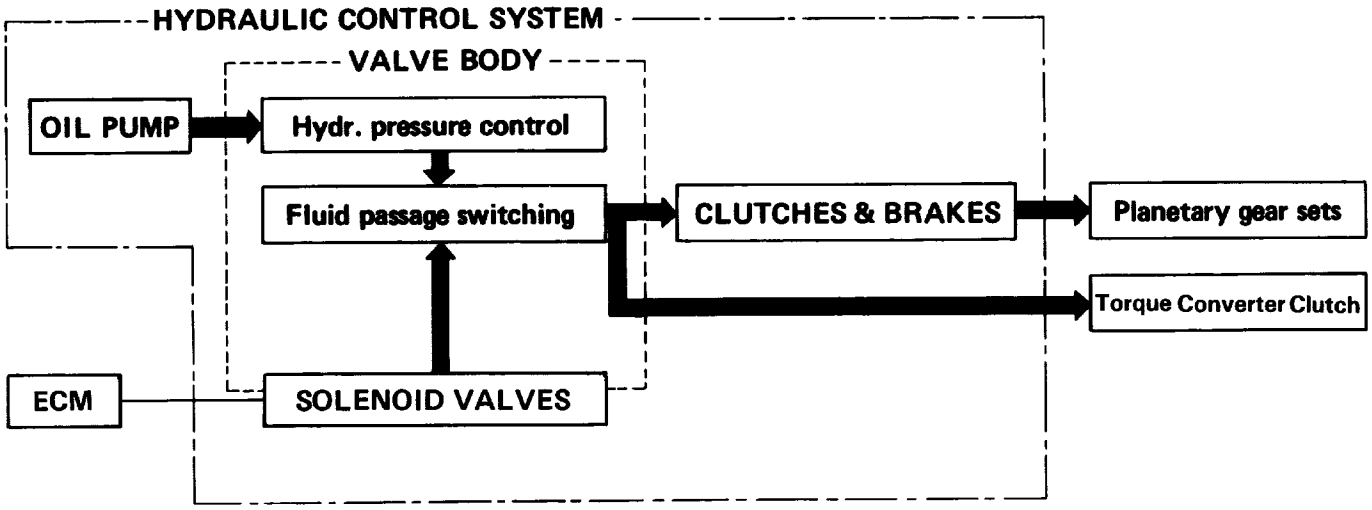

- **LINE PRESSURE**
  Line pressure is the most basic and important pressure used in the automatic transmission, because it is used to operate all of the clutches and brakes in the transmission.
  If the primary regulator valve does not operate correctly, line pressure will be either too high or too low. Line pressure that is too high will lead to shifting shock and consequent engine power loss due to the greater effort required of the oil pump; line pressure that is too low will cause slippage of clutches and brakes, which will, in extreme cases, prevent the vehicle from moving. Therefore, if either of these problems are noted, the line pressure should be measured to see if it is within stan–dard.
- **THROTTLE PRESSURE**
  Throttle pressure is always kept in accordance with the opening angle of the engine throttle valve. This throttle pressure acts on the primary regulator valve and, accordingly, line pressure is regulated in response to the throttle valve opening.
  In the fully hydraulic controlled automatic transmission, throttle pressure is used for regulating line
- Pressure and as signal pressure for up–shift and down–shift of the transmission. In the electronic
- controlled transmission, however, throttle pressure is used only for regulating line pressure. Conse quently, improper adjustment of the transmission throttle cable may result in a line pressure that is too high or too low. This, in turn, will lead to shifting shock or clutch and brake slippage.

ELECTRONIC CONTROL SYSTEM

The electronic control system, which controls the shift points and the operation of the lock–up clutch, is composed of the following three parts:

1. Sensors

These sensors sense the vehicle speed, throttle opening and other conditions and send these data to the ECM in the form of electrical signals.

2. ECM

The ECM determines the shift and lock–up timing based upon the signals from sensors, and con–trols the solenoid valves of the hydraulic control unit accordingly.

3. Actuators

These are three solenoid valves that control hydraulic pressure acting on the hydraulic valves to control shifting and lock–up timing.

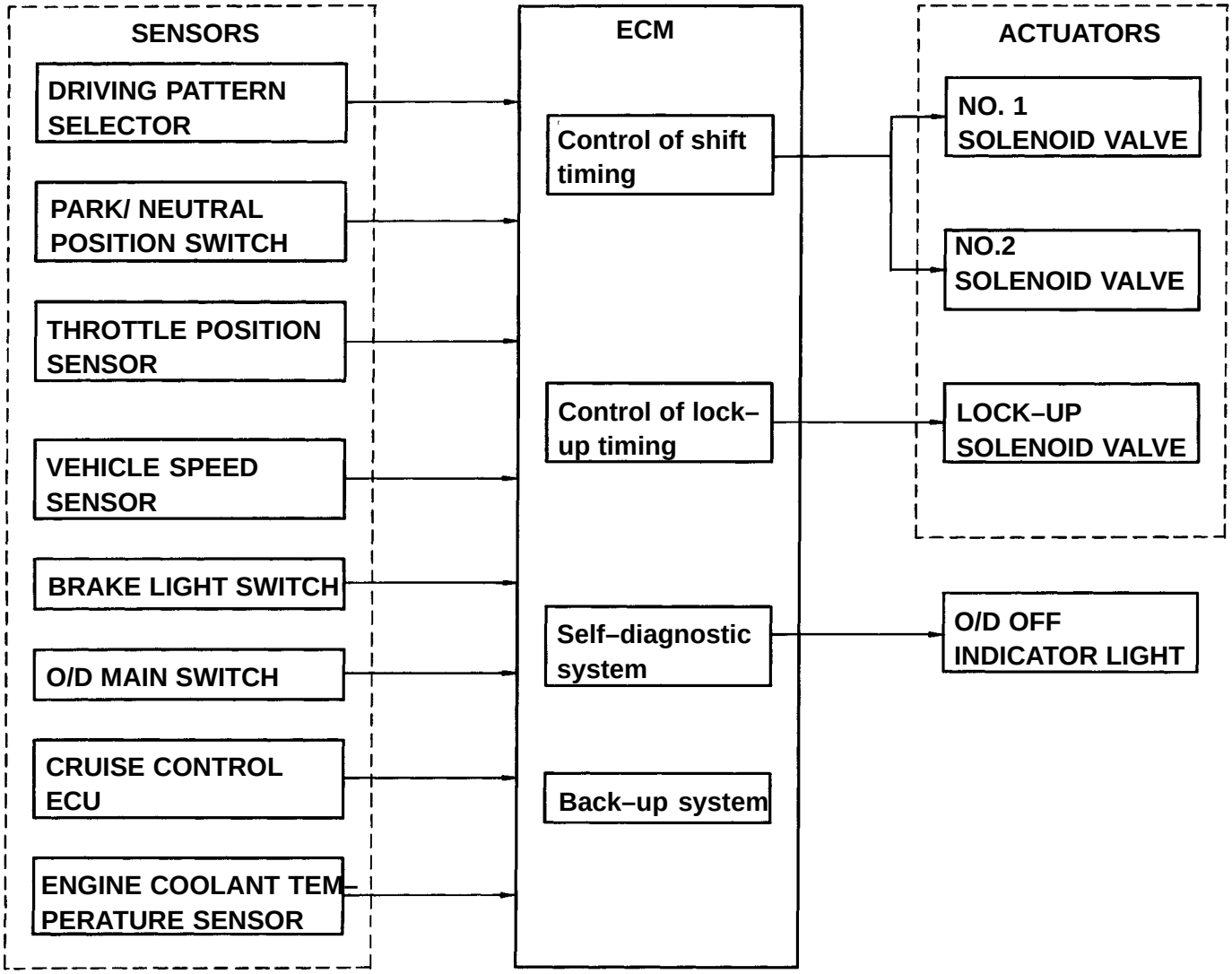

FUNCTION OF ECM

- **Control of Shift Timing**

  The ECM has programmed into its memory the optimum shift pattern for each shift lever position (D, 2, L position) and driving mode (Normal or Power).

  Based on the appropriate shift pattern, the ECM turns No. 1 and No.2 solenoid valves on or off in accordance with the vehicle speed signal from the vehicle speed sensor and the throttle opening signal from the throttle position sensor. In this manner, the ECM operates each shift valve, opening or closing the fluid passages to the clutches and brakes to permit up–shift or down–shift of the transmission.

  HINT: The electronic control system provides shift timing and lock–up control only while the vehicle is traveling forward. In REVERSE, PARK, and NEUTRAL, the transmission is mechanically, not electronically controlled.

- **Control of Overdrive**

  Driving in overdrive is possible if the O/D main switch is on and the shift lever is in the D position. However, when the vehicle is being driven using the cruise control system (CCS), if the actual vehicle speed drops to about 4 km/h (2 mph) below the set speed while the vehicle is running in overdrive, the CCS ECU sends a signal to the ECM to release the overdrive and prevent the transmission from shifting back into overdrive until the actual vehicle speed reaches the speed set in the CCS memory.

  On this model, if the engine coolant temperature falls below 70°C (158°F), preventing the transmission from up–shifting into overdrive.

- **Control of Lock–Up System**

  The ECM has programmed in its memory a lock–up clutch operation pattern for each driving mode (Normal or Power). Based on this lock–up pattern, the ECM turns lock–up solenoid valve on or off in accordance with the vehicle speed signals received from the vehicle speed sensor and the throttle opening signals from the throttle position sensor.

  Depending on whether lock–up solenoid valve is on or off, the lock–up relay valve performs changeover of the fluid passages for the converter pressure acting on the torque converter clutch to engage or disengage the lock–up clutch.

  (Mandatory Cancellation of Lock–Up System)

  If any of the following conditions exist, the ECM turns off lock–up solenoid valve to disengage the lock–up clutch.

  1) The brake light switch comes on (during braking).
  2) The IDL points of the throttle position sensor close (throttle valve fully closed).
  3) The engine coolant temperature falls below 70°C (158°F).

  The purpose of 1) and 2) above is to prevent the engine from stalling if the rear wheels lock up. The purpose of 3) is to cause the torque converter clutch to operate to obtain torque multiplication. The purpose of 4) is both to improve general driveability, and to speed up transmission warm–up.

  Also, while the lock–up system is in operation, the ECM will temporarily turn it off during up–shift or down–shift in order to decrease shifting shock.

TROUBLESHOOTING
Basic Troubleshooting

Before troubleshooting an electronic controlled transmission, first determine whether the problem is electrical or mechanical. To do this, just refer to the basic troubleshooting flow–chart provided below.
If the cause is already known, using the basic troubleshooting chart below along with the general troubleshooting chart on the following pages should speed the procedure.

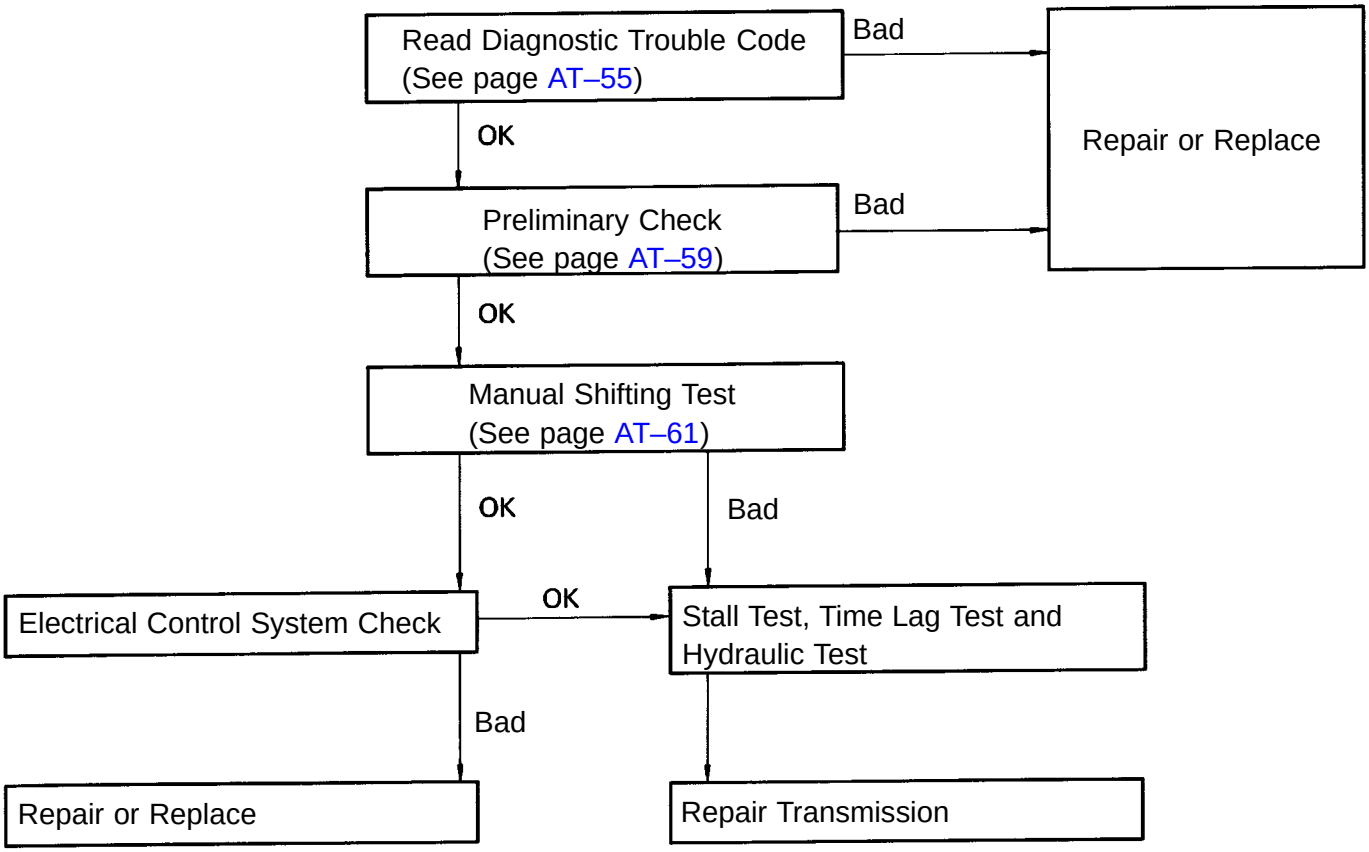

General Troubleshooting

Problem	Possible cause	Remedy	Page
Fluid discolored or smells burnt	Fluid contaminated Torque converter clutch faulty Transmission faulty	Replace fluid Replace torque converter clutch Disassemble and inspect transmission	AT–59 AT–96
Vehicle does not move in any forward position or reverse	Manual linkage out of adjustment Valve body or primary regulator faulty Parking lock pawl faulty Torque converter clutch faulty Converter drive plate broken Oil pump intake screen blocked Transmission faulty	Adjust linkage Inspect valve body Inspect parking lock pawl Replace torque converter clutch Replace drive plate Clean screen Disassemble and inspect transmission	AT–60 AT–87 AT–96 AT–96
Shift lever position incorrect	Manual linkage out of adjustment Manual valve and lever faulty Transmission faulty	Adjust linkage Inspect valve body Disassemble and inspect transmission	AT–60
Harsh engagement into any drive position	Throttle cable out of adjustment Valve body or primary regulator faulty Accumulator pistons faulty Transmission faulty	Adjust throttle cable Inspect valve body Inspect accumulator pistons Disassemble and inspect transmission	AT–60
Delayed 1–2, 2–3 or 3–0/13 up–shift, or down–shift from O/D–3 or 3–2 and shifts back to O/D or 3	Electronic control faulty Valve body faulty Solenoid valve faulty	Inspect electronic control Inspect valve body Inspect solenoid valve	AT–63 AT–72
Slips on 1–2, 2–3 or 3–0/D up–shift, or slips or shudders on acceleration	Manual linkage out of adjustment Throttle cable out of adjustment Valve body faulty Solenoid valve faulty Transmission faulty	Adjust linkage Adjust throttle cable Inspect valve body Inspect solenoid valve Disassemble and inspect transmission	AT–60 AT–60 AT–72
Drag, binding or tie–up on 1–2, 2–3 or 3–O/D up–shift	Manual linkage out of adjustment Valve body faulty Transmission faulty	Adjust linkage Inspect valve body Disassemble and inspect transmission	AT–60

Remark ,k : Refer to A340E Automatic Transmission Repair Manual. (Pub. No. RM271U)

General Troubleshooting (Cont'd)

Problem	Possible cause	Remedy	Page
No lock–up in 2nd, 3rd or 01D	Electronic control faulty Valve body faulty Solenoid valve faulty Transmission faulty	Inspect electronic control Inspect valve body Inspect solenoid valve Disassemble and inspect transmission	AT–63 AT–72
Harsh down–shift	Throttle cable out of adjustment Throttle cable and cam faulty Accumulator pistons faulty Valve body faulty Transmission faulty	Adjust throttle cable Inspect throttle cable and cam Inspect accumulator pistons Inspect valve body Disassemble and inspect transmission	AT–60 AT–60
No down–shift when coasting	Valve body faulty Solenoid valve faulty Electronic control faulty	Inspect valve body Inspect solenoid valve Inspect electronic control	AT–72 AT–63
Down–shift occurs too quickly or too late while coasting	Throttle cable faulty Valve body faulty Transmission faulty Solenoid valve faulty Electronic control faulty	Inspect throttle cable Inspect valve body Disassemble and inspect transmission Inspect solenoid valve Inspect electronic control	AT–60 AT–72 AT–63
No O/D–3, 3–2 or 2–1 kick–down	Solenoid valve faulty Electronic control faulty Valve body faulty	Inspect solenoid valve Inspect electronic control Inspect valve body	AT–72 AT–63
No engine braking 2 or L position	Solenoid valve faulty Electronic control faulty Valve body faulty Transmission faulty	Inspect solenoid valve Inspect electronic control Inspect valve body Disassemble and inspect transmission	AT–72 AT–63
Vehicle does not hold in P	Manual linkage out of adjustment Parking lock pawl cam and spring faulty	Adjust linkage Inspect cam and spring	AT–60 AT–87

Remark *: Refer to A340E Automatic Transmission Repair Manual. (Pub. No. RM271U)

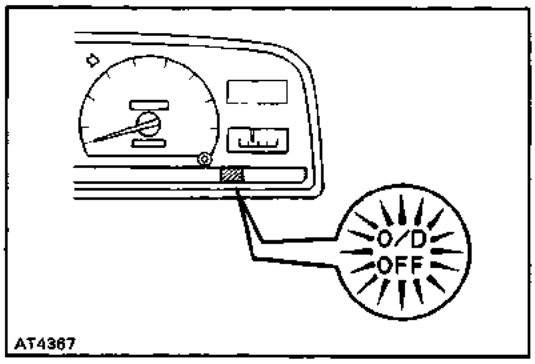

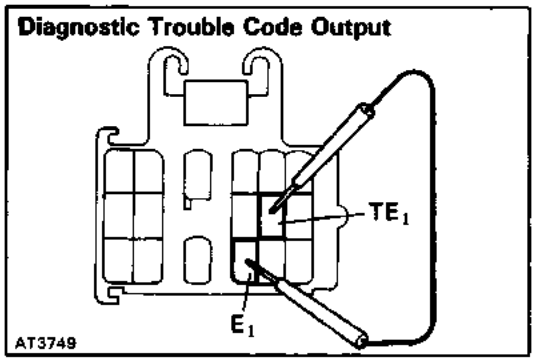

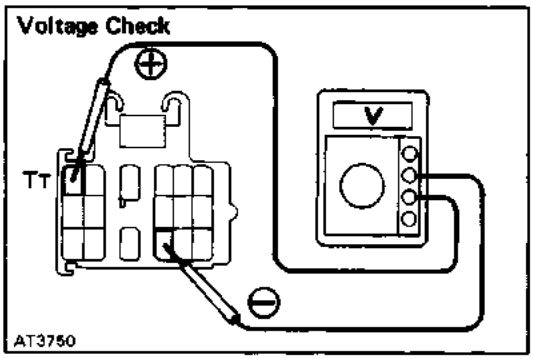

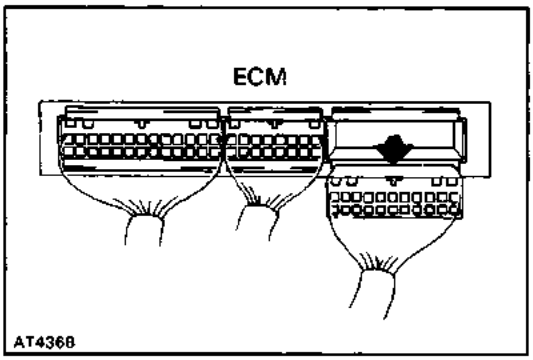

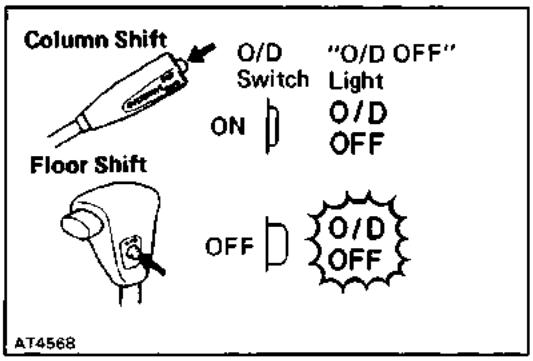

Diagnosis System

DESCRIPTION

1. A self–diagnosis function is built into the electrical control system. Warning is indicated by the overdrive OFF indicator light.

   HINT: Warning and diagnostic trouble codes can be read only when the overdrive switch is ON. If OFF, the overdrive OFF light is lit continuously and will not blink.

   (a) If a malfunction occurs within the vehicle speed sensors (No. 1 or 2) or solenoids (No. 1 or 2), the overdrive OFF light will blink to warn the driver. However, there will be no warning of a malfunction with lock–up solenoid.

   (b) The diagnostic trouble code can be read by the number of blinks of the overdrive OFF indicator light when terminals TIE, and E l are connected. (See page AT–56)

   (c) The throttle position sensor or brake signal are not indicated, but inspection can be made by checking the voltage at terminal TT of the data link connector 1.

   (d) The signals to each gear can be checked by measuring the voltage at terminal TT of the data link connectar 1 while driving.

2. The diagnostic trouble code is retained in memory by the ECM and due to back–up voltage, is not canceled out when the engine is turned off. Consequently, after repair, it is necessary to turn the ignition switch off and remove the MFI fuse (15A) or disconnect the EC M connector to cancel out the diagnostic trouble code. (See page AT–56)

   HINT:

   Low battery positive voltage will cause faulty operation of the diagnosis system. Therefore, always check the battery first.

   Use a voltmeter and ohmmeter that have an impedance of at least 10 kΩ/v.

CHECK ”O/D OFF” INDICATOR LIGHT

1. Turn the ignition switch ON.
2. The ”O/D OFF” light will come on when the O/D switch is placed at OFF.
3. When the O/D switch is set to ON, the–O/D OFF” light should go out.

If the–O/D OFF” light flashes when the O/D switch is set to ON, the electronic control system is faulty.

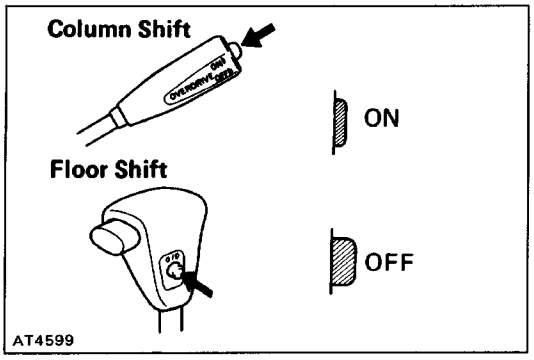

READ DIAGNOSTIC TROUBLE CODE

1. TURN IGNITION SWITCH AND O/D SWITCH TO ON

Do not start the engine.

HINT: Warning and diagnostic trouble codes can be read only when the overdrive switch is ON. If OFF, the overdrive OFF light will light continuously and will not blink.

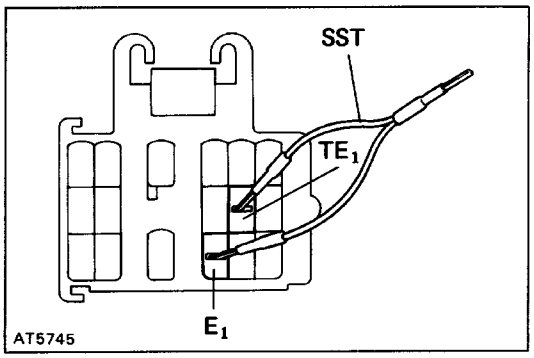

2. CONNECT TE, AND E, TERMINALS OF DATA LINK CONNECTOR 1

Using a SST, connect terminals TE, and E , of the data link connector 1.

SST 09843–18020

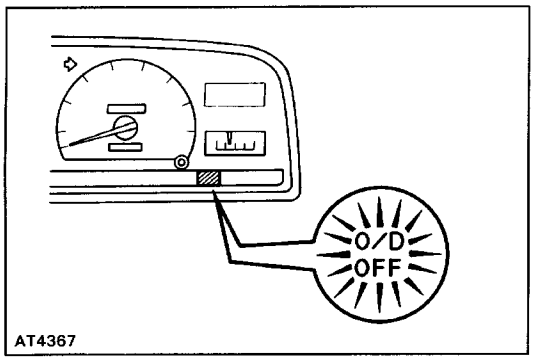

3. READ DIAGNOSTIC TROUBLE CODE

Read the diagnostic trouble code as indicated by the number of times the O/D OFF light flashes.

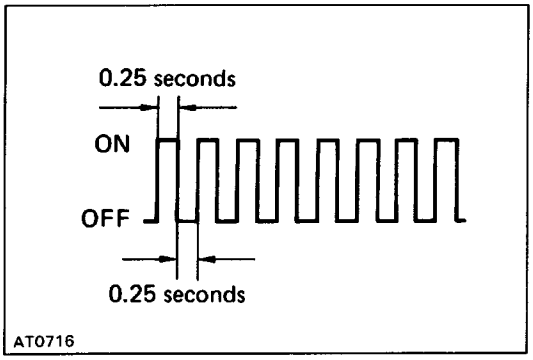

(Diagnostic Trouble Code Indication)

- If the system is operating normally, the light will flash 2 times per second.

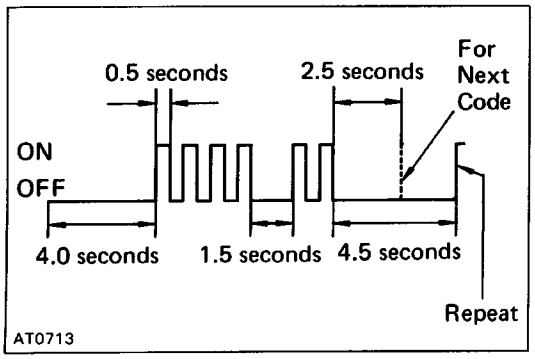

- In the event of a malfunction, the light will flash 1 time per second. The number of blinks will equal the first number and, after 1.5 seconds pause, the second number of the two digit diagnostic trouble code. If there are two or more codes, there will be a 2.5 sec–onds pause between each.

HINT: In the event of several trouble codes occuring si–multaneously, indication will begin from the smaller value and continue to the larger.

4. REMOVE SST

DIAGNOSTIC TROUBLE CODES

Code No.	Light Pattern	Diagnosis System
–		Normal
42		Defective No. 1 vehicle speed sensor (in ATM)– severed wire harness or short circuit
61		Defective No. 2 vehicle speed sensor (in ATM)– severed wire harness or short circuit
62		Severed No. 1 solenoid or short circuit– severed wire harness or short circuit
63		Severed No.2 solenoid or short circuit– severed wire harness or short circuit
64		Severed lock–up solenoid or short circuit– severed wire harness or short circuit

AT2020

HINT: If codes 62, 63 or 64 appear, there is an electri– cal malfunction in the solenoid.
Causes due to mechanical failure, such as a stuck valve, will not appear.

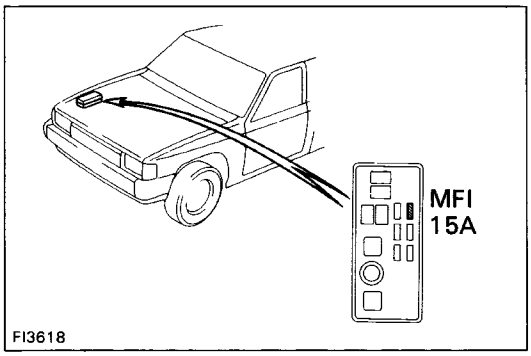

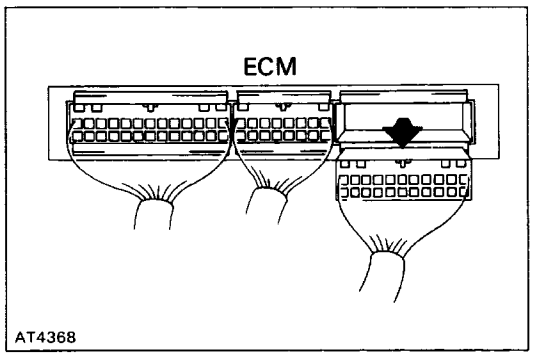

CANCEL OUT DIAGNOSTIC TROUBLE CODE

1. After repair of the trouble area, the diagnostic trouble code retained in memory by the ECM must be canceled by removing the MFI fuse (1 5A) for 10 seconds or more, depending on ambient temperature (the lower the tem– perature, the longer the fuse must be left out) with the ig– nition switch OFF.
   HINT:
   - Cancellation can be also done by removing the battery negative (–) terminal, but in this case other memory systems will be also canceled out.
   - The diagnostic trouble code can be also canceled out by disconnecting the EC M connector.
   - If the diagnostic trouble code is not canceled out, it will be retained by the ECM and appear along with a new code in event of future trouble.
2. After cancellation, perform a road test to confirm that a ”normal code” is now read on the O/D OFF light.

TROUBLESHOOTING FLOW–CHART

HINT:

- If diagnostic trouble code Nos. 42, 61, 62 or 63 are output, the overdrive OFF indicator light will begin to blink immediately to warn the driver. However, an impact or shock may cause the blinking to stop; but the code will still be retained in the ECM memory until canceled out.
- There is no warning for diagnostic trouble code No. 64.
- In the event of a simultaneous malfunction of both No. 1 and No. 2 vehicle speed sensors, no diag–nostic trouble code will appear and the fail–safe system will not function. However, when driving in the D position, the transmission will not up–shift from first gear, regardless of the vehicle speed.

Diagnostic trouble code 42 (No. 1 vehicle speed sensor circuitry)

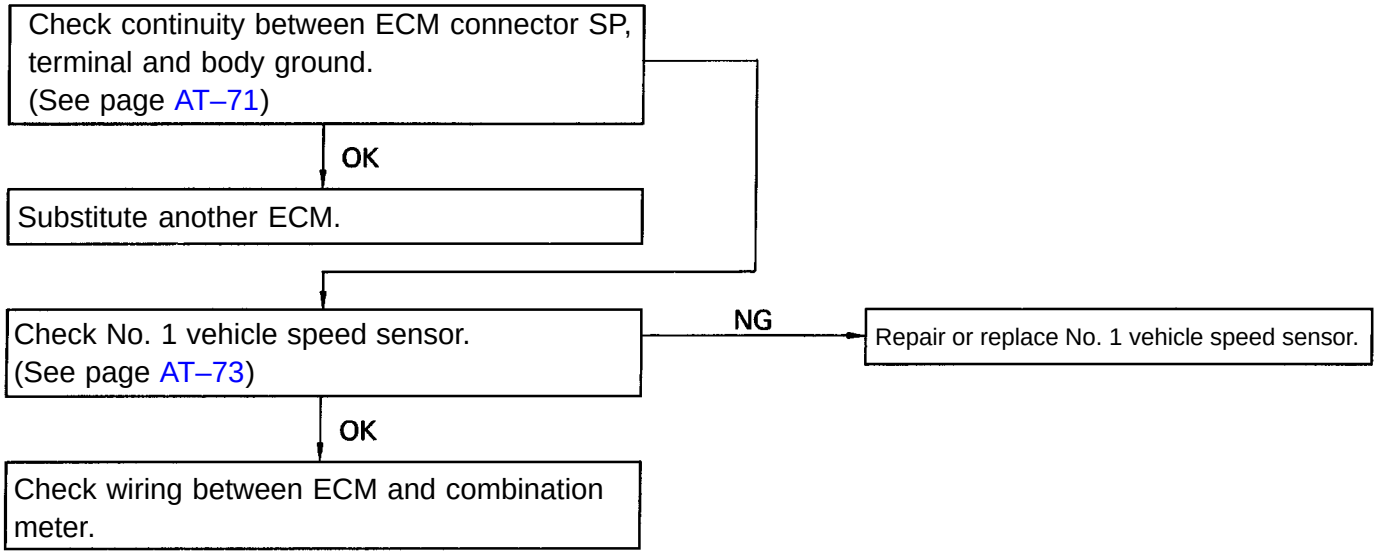

Diagnostic trouble code 61 (No.2 vehicle speed sensor circuitry)

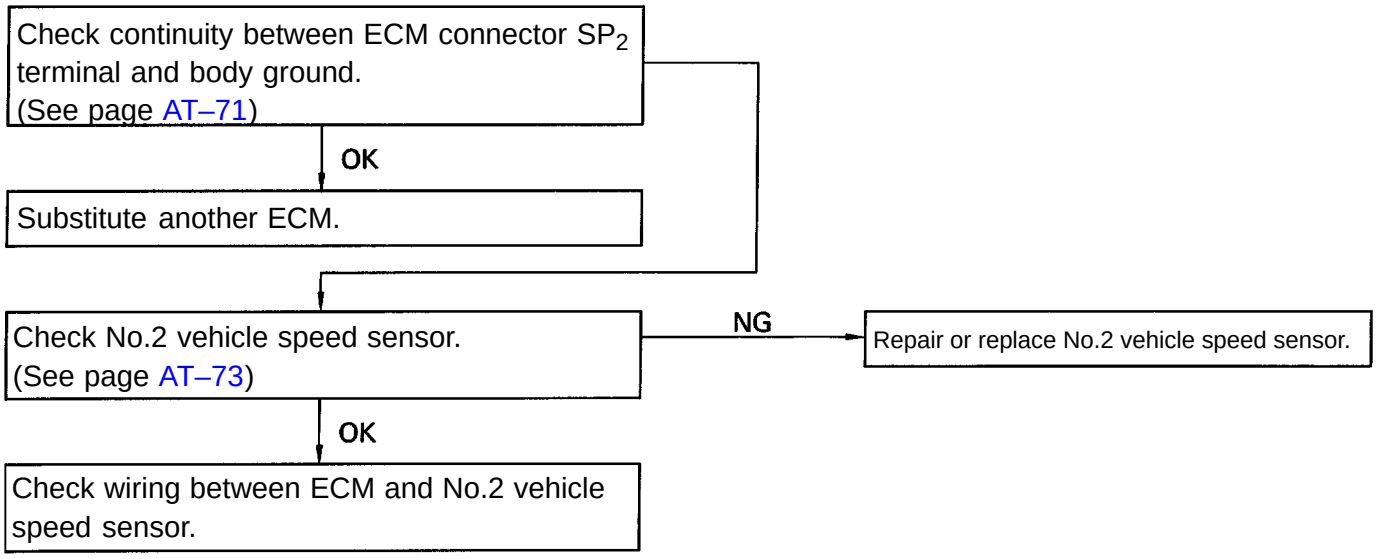

Diagnostic trouble code 62 (No. 1 solenoid valve circuitry)

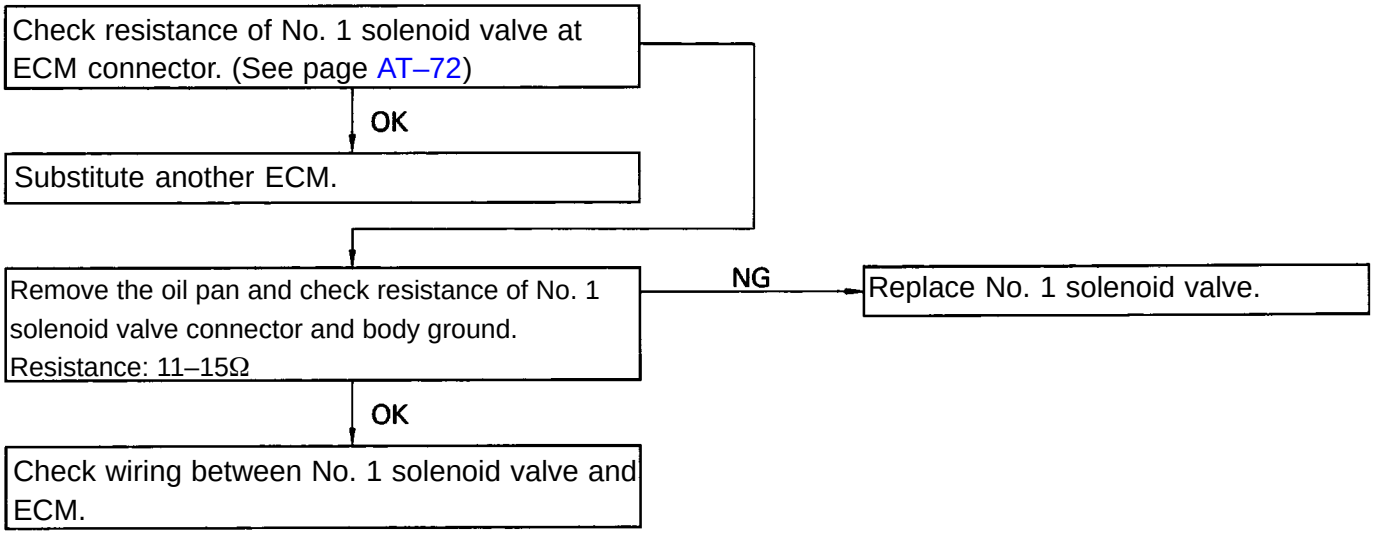

Diagnostic trouble code 63 (No.2 solenoid valve circuitry)

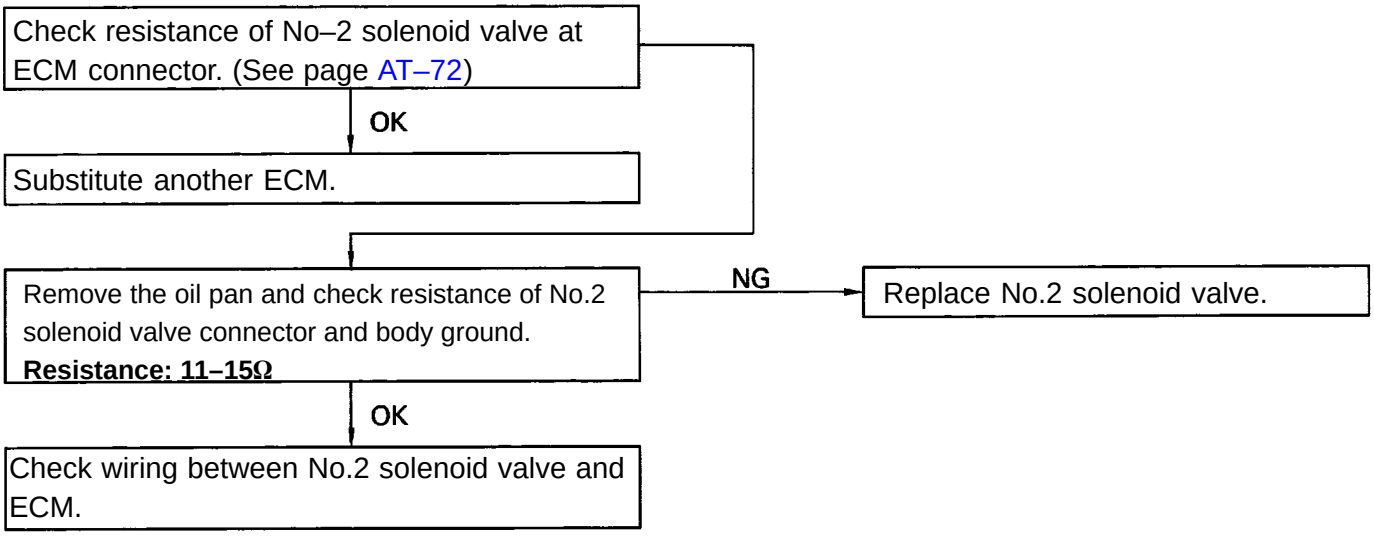

Diagnostic trouble code 64 (Lock–up solenoid valve circuitry)

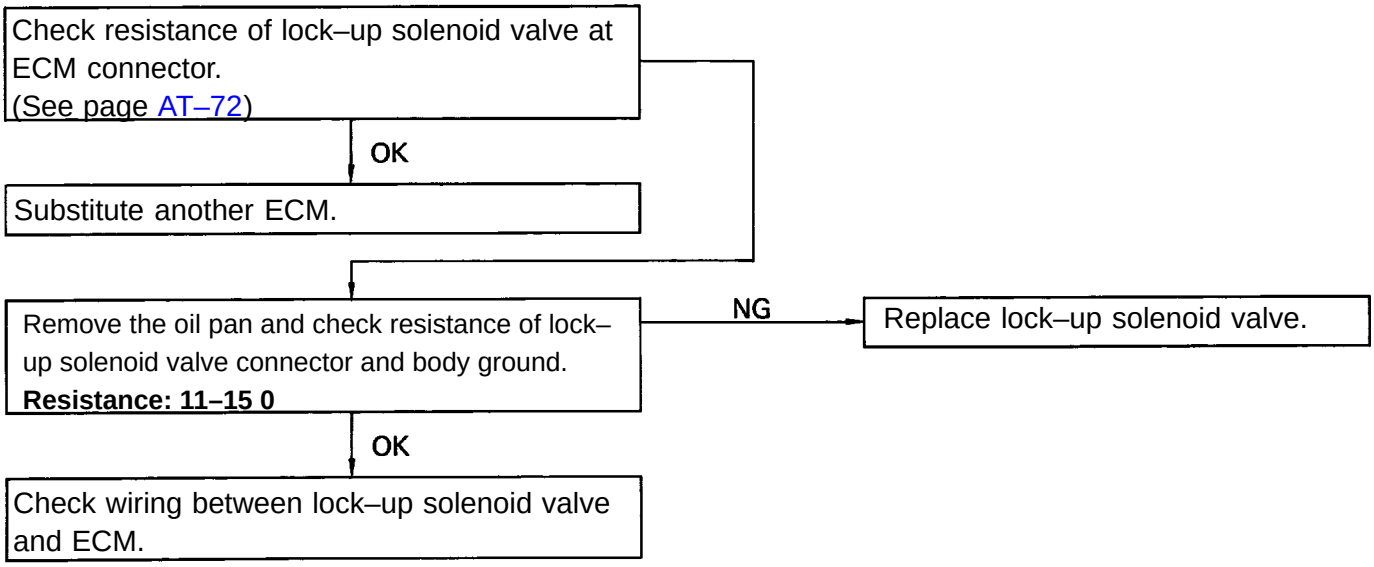

Preliminary Check

1. CHECK FLUID LEVEL

HINT:

The vehicle must have been driven so that the engine and transmission are at normal operating temperature. (Fluid temperature: 70–80 °C or 158–176 °F)

Only use the COOL range on the dipstick as a rough reference when the fluid is replaced or the engine does not run.

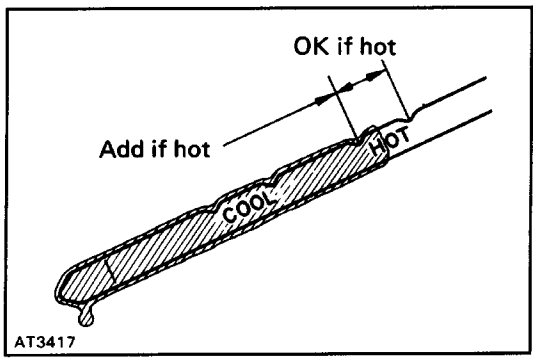

(a) Park the vehicle on a level surface, set the parking brake.

(b) With the engine idling, shift the shift lever into all positions from P to L position and return to P position.

HINT: Depress brake pedal.

(c) Pull out the transmission dipstick and wipe it clean.

(d) Push it back fully into the tube.

(e) Pull it out and check that the fluid level is in the HOT range.

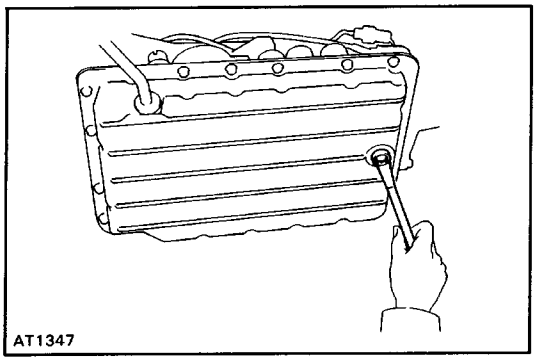

If the level is at the low side, add fluid.

Fluid type: ATF DEXRON®II

NOTICE: Do not overfill.

2. CHECK FLUID CONDITION

If the fluid smells burnt or is black, replace it as following procedures.

(a) Remove the drain plug and drain the fluid.

(b) Reinstall the drain plug securely.

(c) With the engine OFF, add new fluid through the oil filler tube.

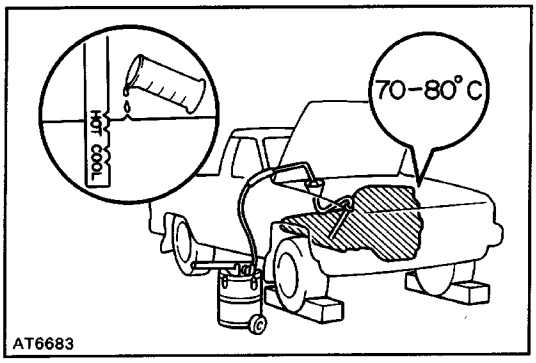

Fluid type ATF DEXRON®II

Capacity:

Total: 7.2 liters (7.6 US qts, 6.3 Imp qts)

Drain and refill: 1.6 liters (1.7 US qts, 1.4 Imp.qts)

(d) Start the engine and shift the shift lever into all positions from P to L position and then shift into P position.

(e) With the engine idling, check the fluid level. Add fluid up to the COOL level on the dipstick.

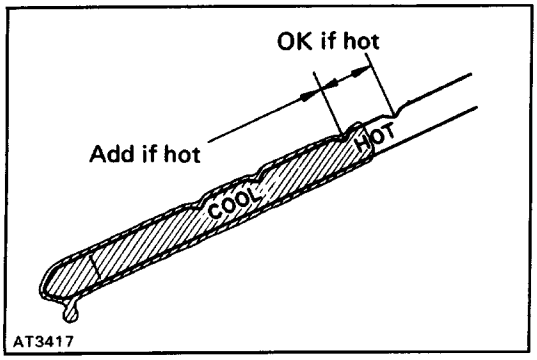

(f) Check the fluid level with the normal operating temperature (70–80 °C or 158–176 °F) and add as necessary.

NOTICE: Do not overfill.

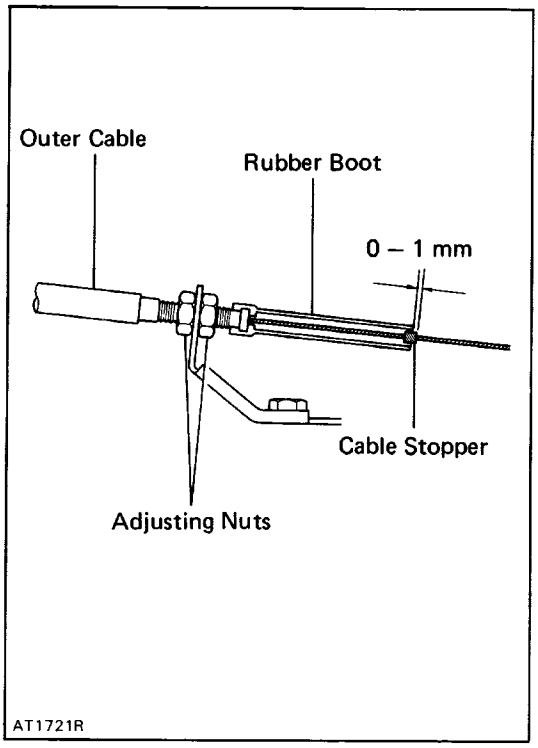

3. INSPECT THROTTLE CABLE

(a) Depress the accelerator pedal all the way and check that the throttle valve opens fully.

HINT: If the valve does not open fully, adjust the accel–erator cable.

(b) Fully depress the accelerator pedal.

(c) Measure the distance between the end of the boot and stopper on the cable.

Standard distance: 0–1 mm (0–0.04 in.)

If the distance is not standard, adjust the cable by the ad–justing nuts.

4. INSPECT SHIFT LEVER POSITION

When shifting the shift lever from the N position to other positions, check that the lever can be shifted smoothly and accurately to each position and that the position in–dicator correctly indicates the position.

If the indicator is not aligned with the correct position, carry out the following adjustment procedures.

(Column shift)

(a) Remove the nut on the cross shaft rod.

(b) Push the cross shaft rod fully downward.

(c) Return the cross shaft rod two notches to N posi–tion.

(d) Set the shift lever to N position.

(e) While holding the shift lever lightly toward the R po–sition side, adjust the cross shaft rod nut.

(f) Tighten the cross shaft rod nut.

(g) Start the engine and make sure that the vehicle moves forward when shifting the lever from the N to D position and reverse when shifting it to the R po–sition.

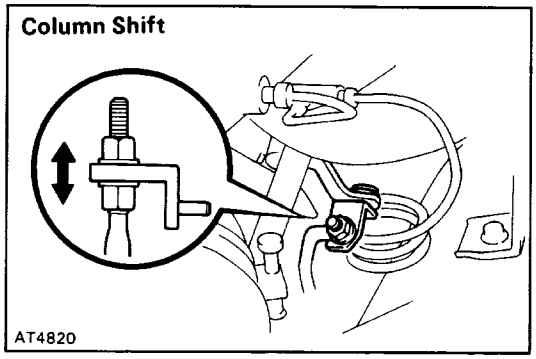

(Floor shift)

(a) Remove the nut on the cross shaft rod.

(b) Push the cross shaft rod fully downward.

(c) Return the cross shaft rod three notches to N posi–tion.

(d) Set the shift lever to N position.

(e) While holding the shift lever lightly toward the R po–sition side, adjust the cross shaft rod nut.

(f) Tighten the cross shaft rod nut.

(g) Start the engine and make sure that the vehicle moves forward when shifting the lever from the N to D position and reverse when shifting it to the R po–sition.

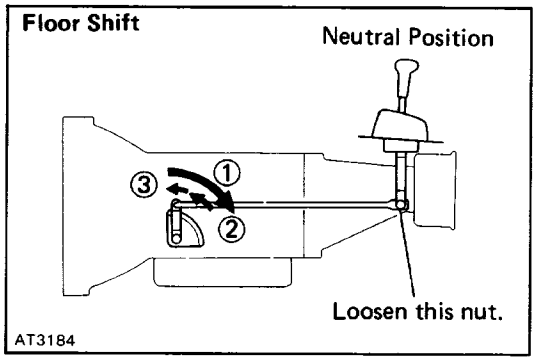

5. INSPECT PARK/NEUTRAL POSITION SWITCH

Check that the engine can be started with the shift lever only in the N or P position, but not in other positions.

If not as stated above, carry out the following adjustment procedures.

(a) Loosen the park/neutral position switch bolt and set the shift lever to the N position.

(b) Align the groove and neutral basic line.

(c) Hold in position and tighten the bolt.

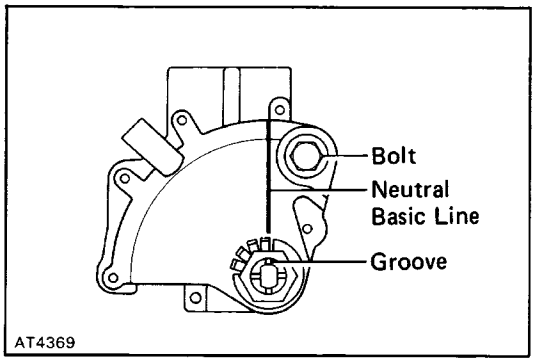

Torque: 13 N–m (130 kgf–cm, 9 in.¿lbf)

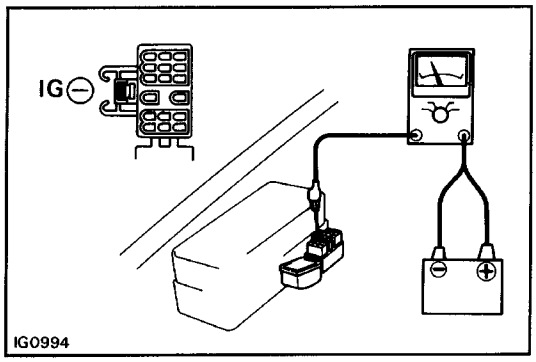

6. INSPECT IDLE SPEED (IN POSITION)

Connect a tachometer test probe to the data link connec–tor 1 terminal IG ⊖, inspect the idle speed.

Idle speed: 800 RPM

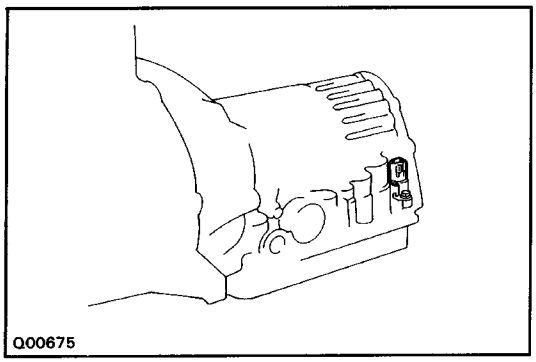

Manual Shifting Test

HINT: With this test, it can be determined whether the trouble lies within the electrical circuit or is a mechanical problem in the transmission.

1. DISCONNECT SOLENOID WIRE

2. INSPECT MANUAL DRIVING OPERATION

Check that the shift and gear position correspond with the table below.

Shift position	D position	2 position	L position	R position	P position
Gear position	O/D	3rd	**1st**	Reverse	Pawl Lock

HINT: If the L, 2 and D position gear positions are diffi–cult to distinguish, perform the following road test.

- While driving, shift through the L, 2 and D positions. Check that the gear change corresponds to the shift position.
  If any abnormality is found in the above test, the problem lies in transmission itself.

3. CONNECT SOLENOID WIRE

4. CANCEL OUT DIAGNOSTIC TROUBLE CODE

(See page AT–56)

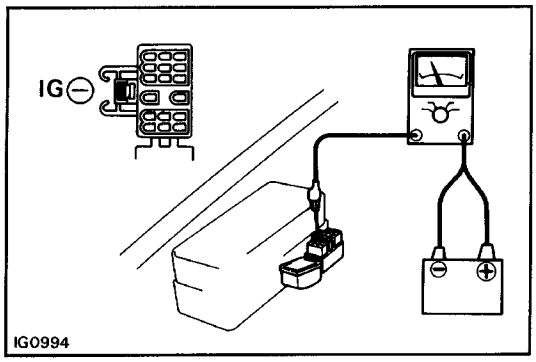

6. INSPECT IDLE SPEED (IN POSITION)

Connect a tachometer test probe to the data link connec–tor 1 terminal IG ⊖, inspect the idle speed.

Idle speed: 800 RPM

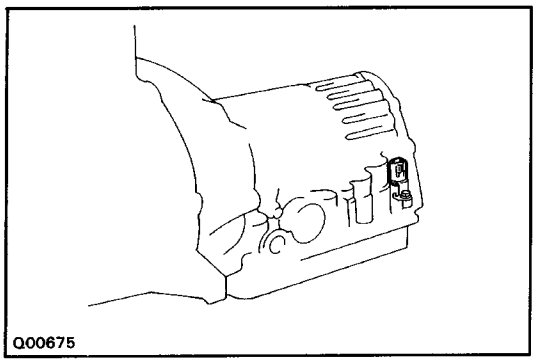

Manual Shifting Test

HINT: With this test, it can be determined whether the trouble lies within the electrical circuit or is a mechanical problem in the transmission.

1. DISCONNECT SOLENOID WIRE

2. INSPECT MANUAL DRIVING OPERATION

Check that the shift and gear position correspond with the table below.

Shift position	D position	2 position	L position	R position	P position
Gear position	O/D	3rd	**1st**	Reverse	Pawl Lock

HINT: If the L, 2 and D position gear positions are diffi–cult to distinguish, perform the following road test.

- While driving, shift through the L, 2 and D positions. Check that the gear change corresponds to the shift position.
  If any abnormality is found in the above test, the problem lies in transmission itself.

3. CONNECT SOLENOID WIRE

4. CANCEL OUT DIAGNOSTIC TROUBLE CODE

(See page AT–56)

REFERENCE: Possible gear position in accordance with solenoid operating conditions.

Position	NORMAL			NO. 1 SOLENOID MALFUNCTIONING			NO.2 SOLENOID MALFUNCTIONING			BOTH SOLENOIDS MALFUNCTIONING		
	Solenoid Valve		Gear Position	Solenoid Valve		Gear Position	Solenoid Valve		Gear Position	Solenoid Valve		Gear Position
	No. 1	No. 2		No. 1	No. 2		No. 1	No. 2		No. 1	No. 2	
D position	ON	OFF	1 st	×	ON (OFF)	3rd (O/D)	ON	×	1 st	×	×	O/D
	ON	ON	2nd	×	ON	3rd	OFF (ON)	×	O/D (1st)	×	×	O/D
	OFF	ON	3rd	×	ON	3rd	OFF	×	O/D	×	×	O/D
	OFF	OFF	O/D	×	OFF	O/D	OFF	×	O/D	×	×	O/D
2 position	ON	OFF	1 st	×	ON (OFF)	3rd (O/D)	ON	×	1 st	×	×	3rd
	ON	ON	2nd	×	ON	3rd	OFF (ON)	×	3rd (1st)	×	×	3rd
	OFF	ON	3rd	×	ON	3rd	OFF	×	3rd	×	×	3rd
L position	ON	OFF	1 st	×	OFF	1st	ON	×	1 st	×	×	1st
	ON	ON	2nd	×	ON	2nd	ON	×	1 st	×	×	1 st

( ): No fail–safe function x : Malfunctions

Electronic Control System

PRECAUTION

Do not open the cover or the case of the ECM and various computer unless absolutely necessary. (If the IC terminals are touched, the IC may be destroyed by static electricity.)

ELECTRONIC CONTROL CIRCUIT

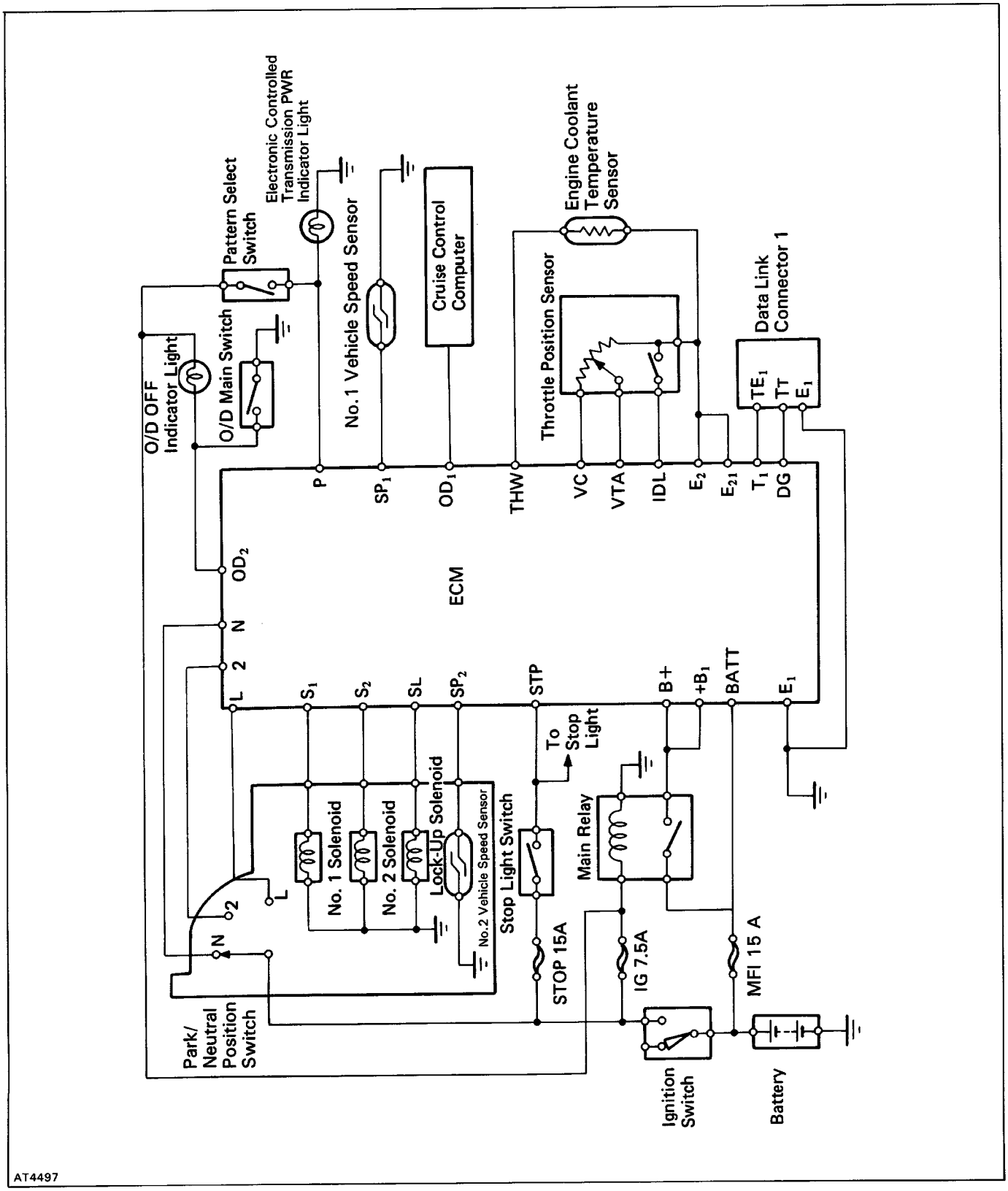

ELECTRONIC CONTROL COMPONENTS

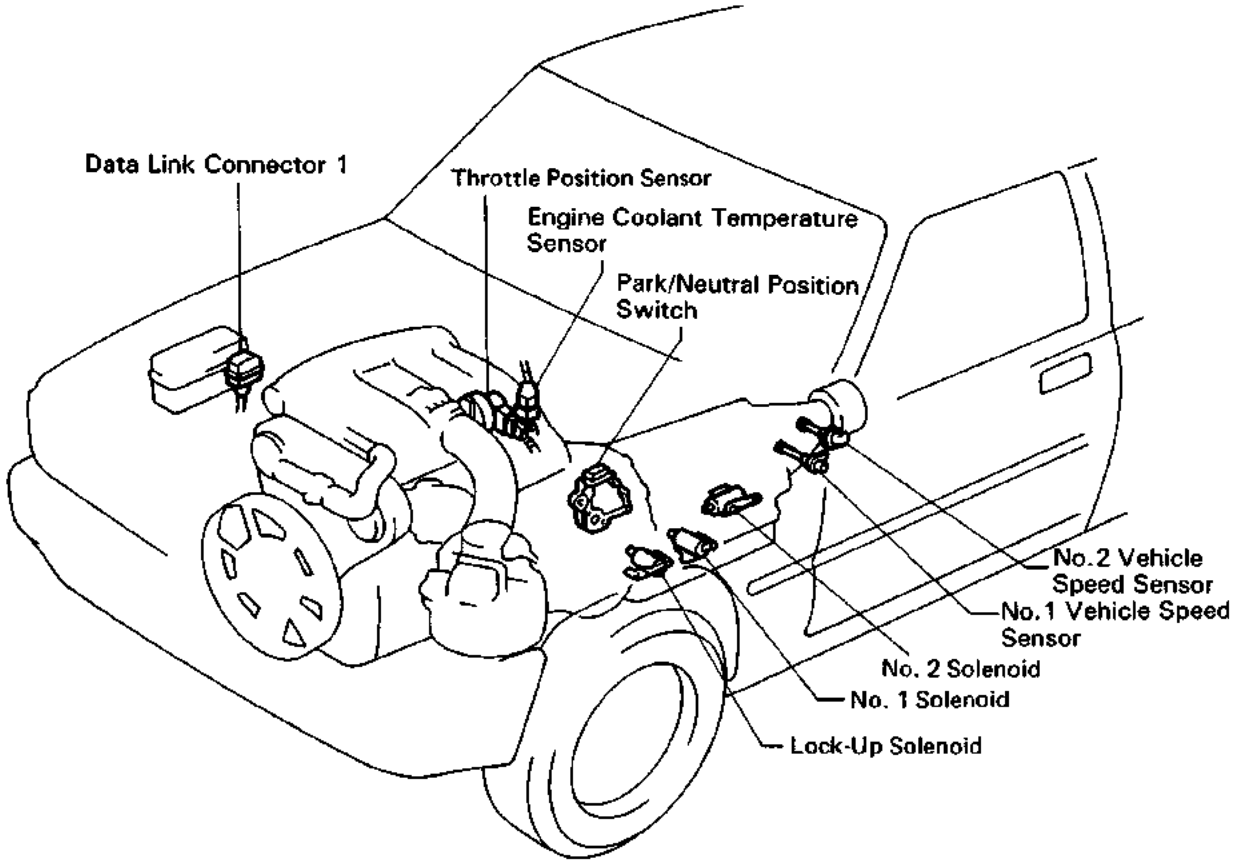

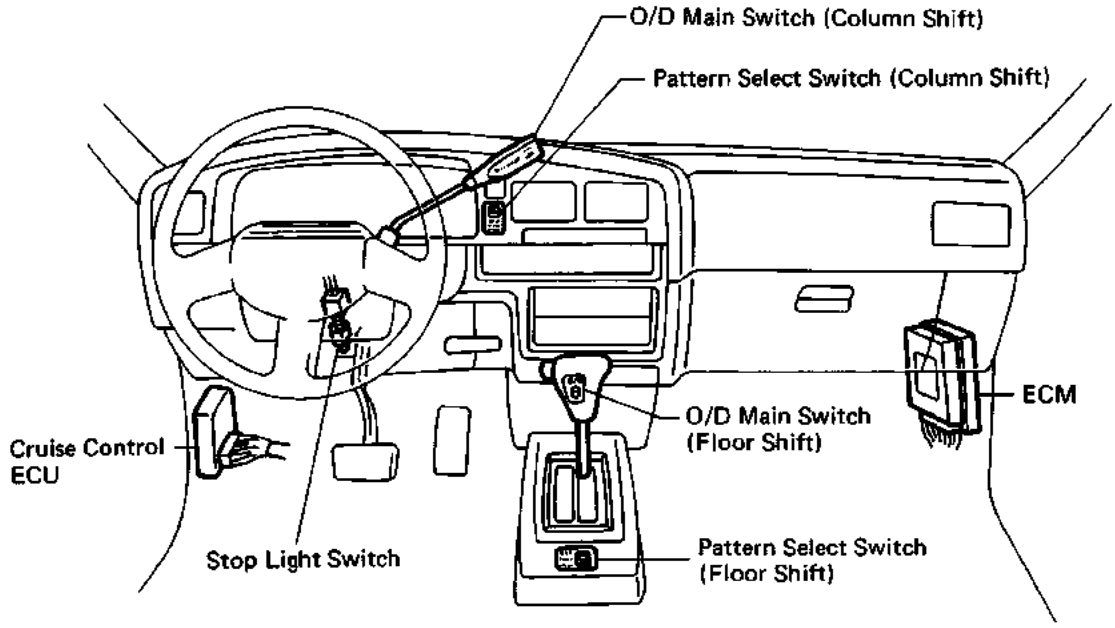

Q00559
Q00558

TROUBLESHOOTING FLOW–CHART

Trouble No. 1 No Shifting

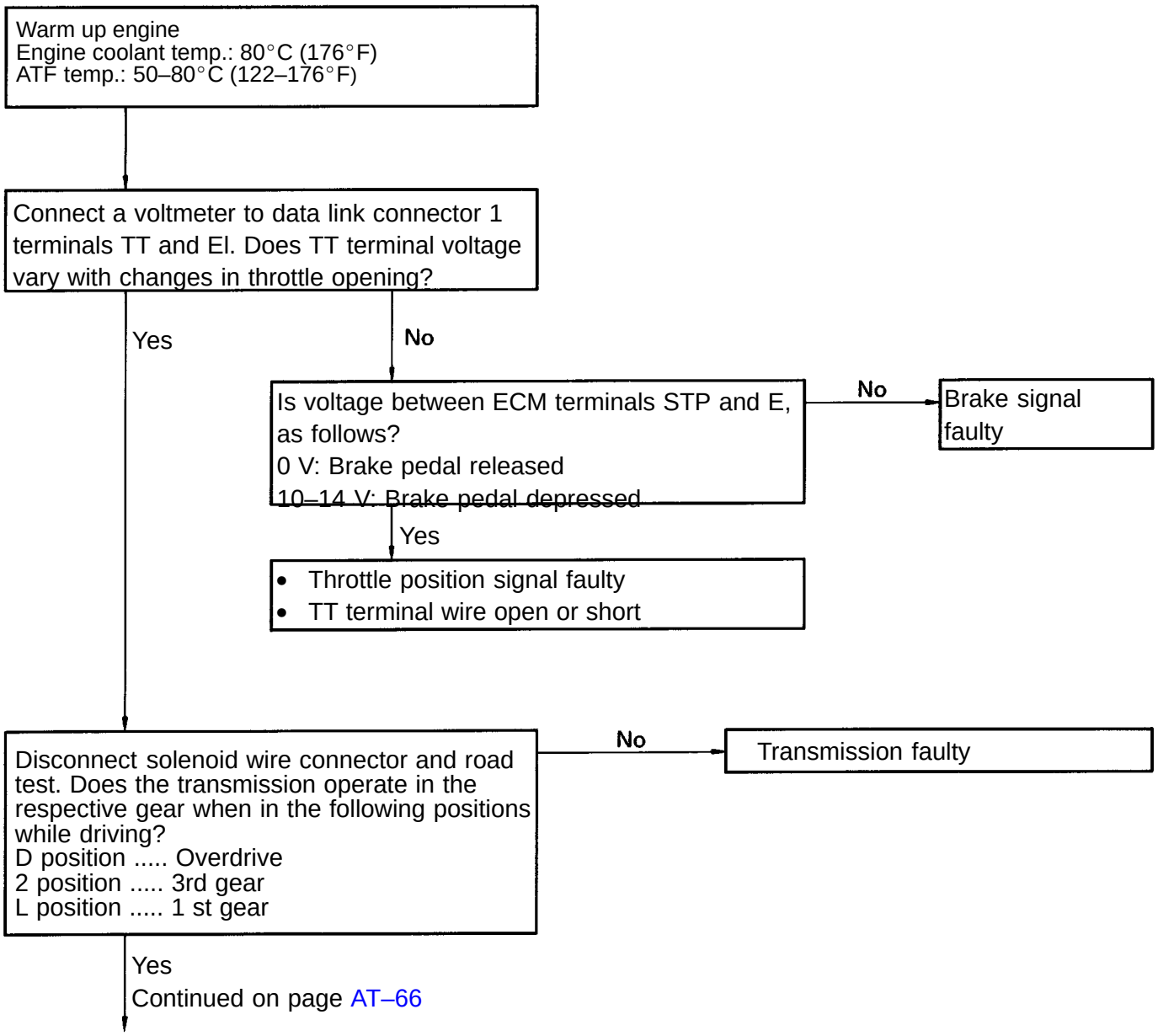

Continued on page AT–66

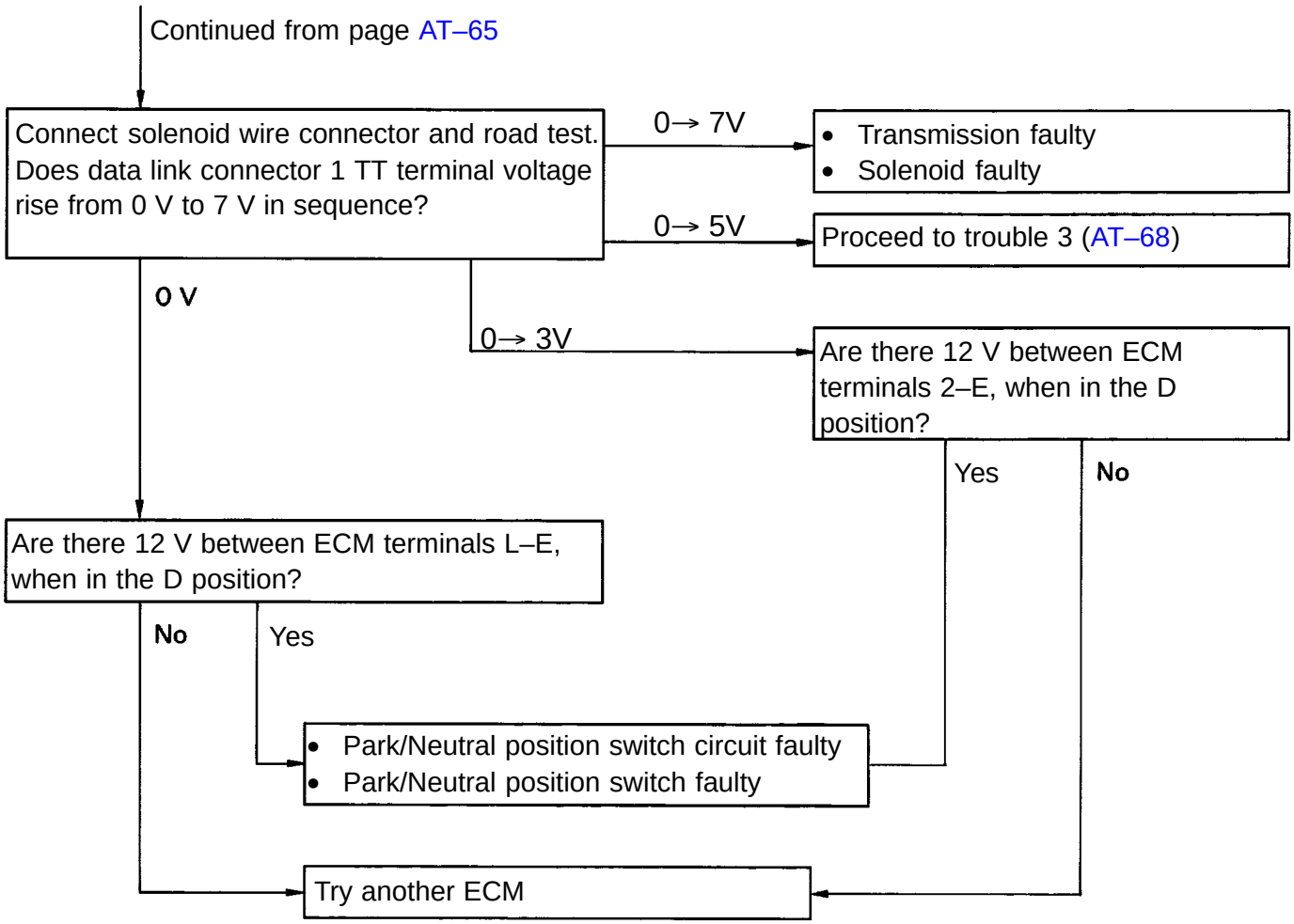
Continued from page AT–65
Connect solenoid wire connector and road test. Does data link connector 1 TT terminal voltage rise from 0 V to 7 V in sequence?
0→ 7V
• Transmission faulty
• Solenoid faulty
0→ 5V
Proceed to trouble 3 (AT–68)
0 V
0→ 3V
Are there 12 V between ECM terminals 2–E, when in the D position?
Yes
No
Are there 12 V between ECM terminals L–E, when in the D position?
No
Yes
• Park/Neutral position switch circuit faulty
• Park/Neutral position switch faulty
Try another ECM

Trouble No.2 Shift point too high or too low

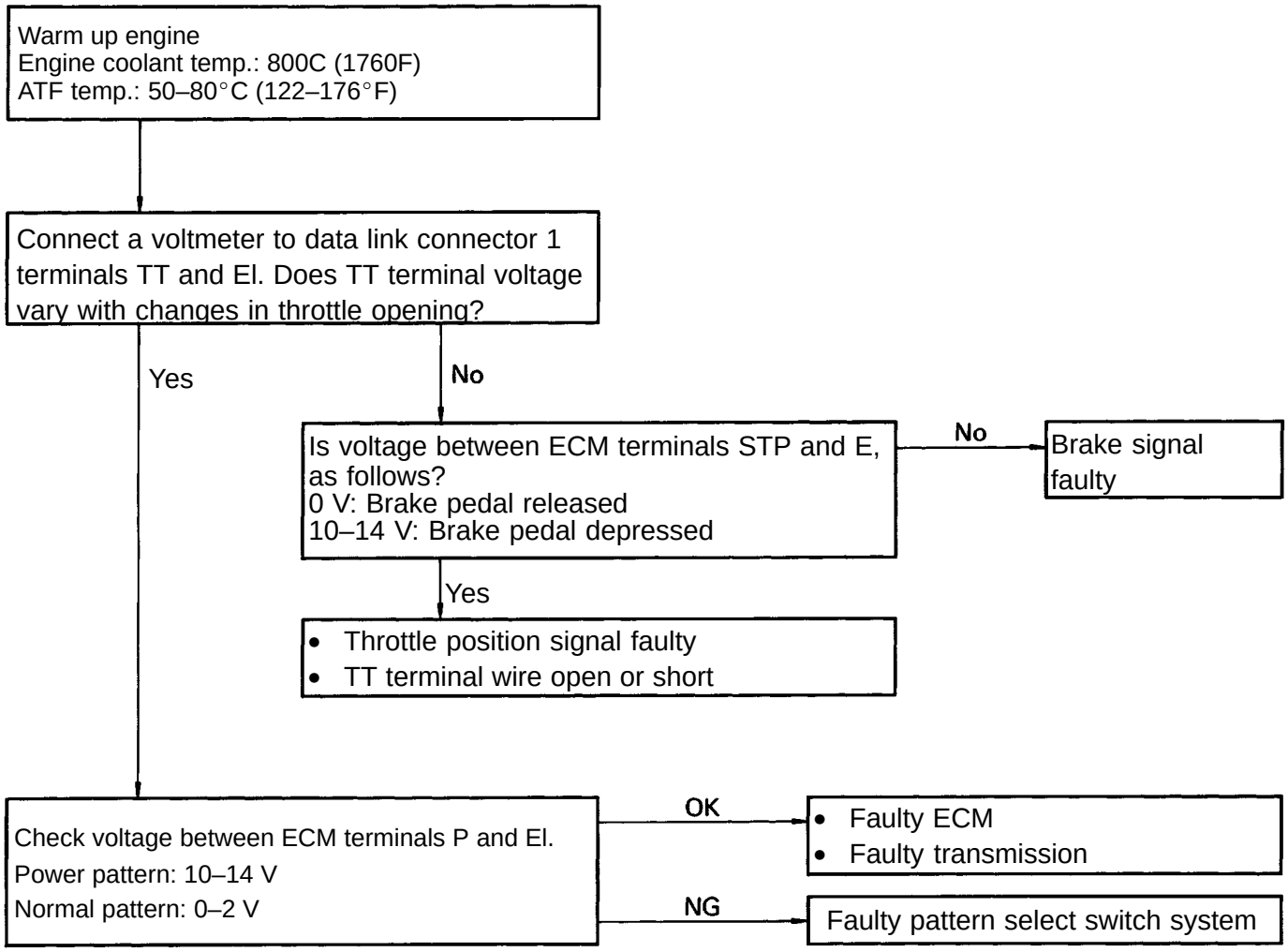

Trouble No.3 No up–shift to overdrive (After warm–up)

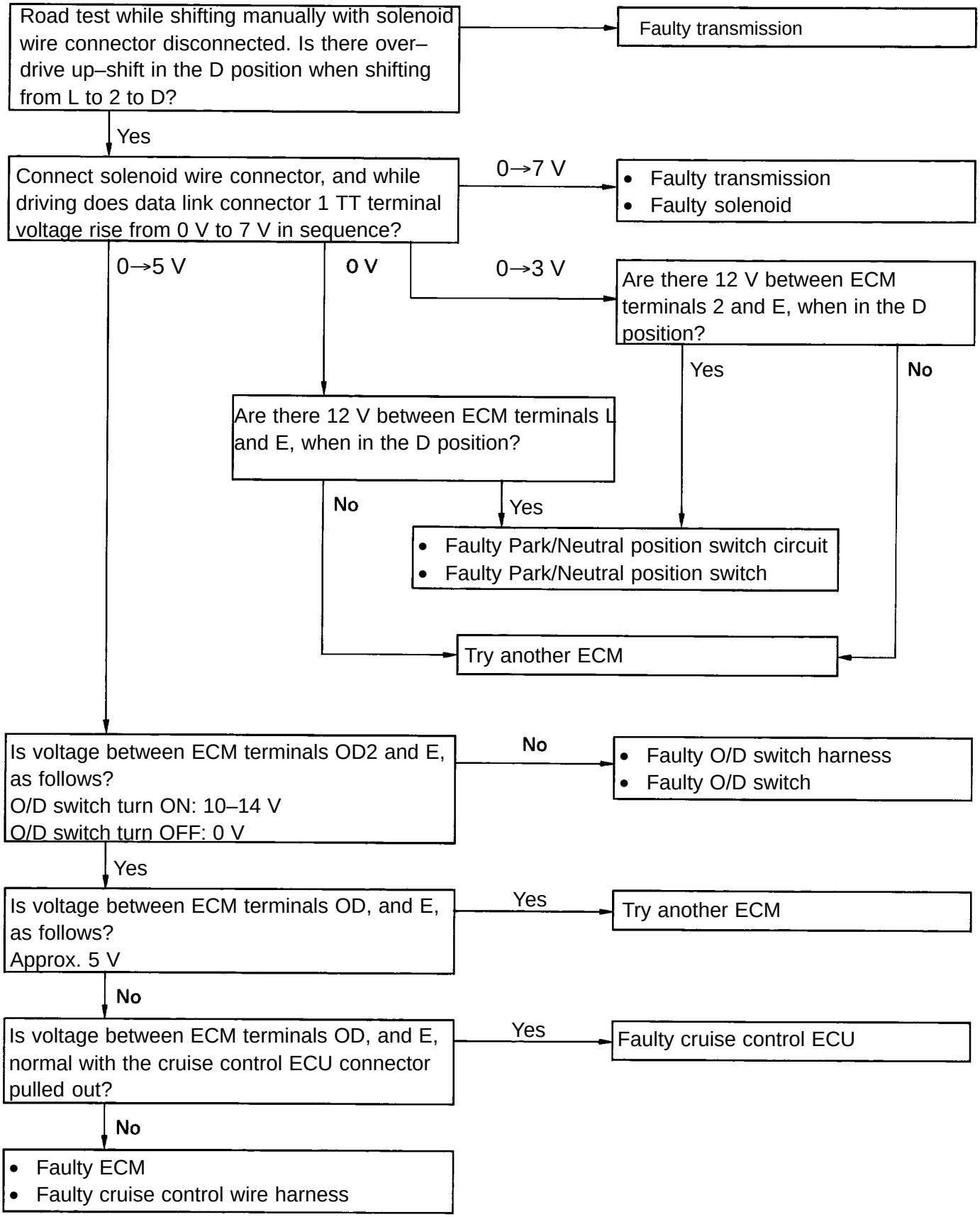

Trouble No.4 No lock–up (After warm–up)

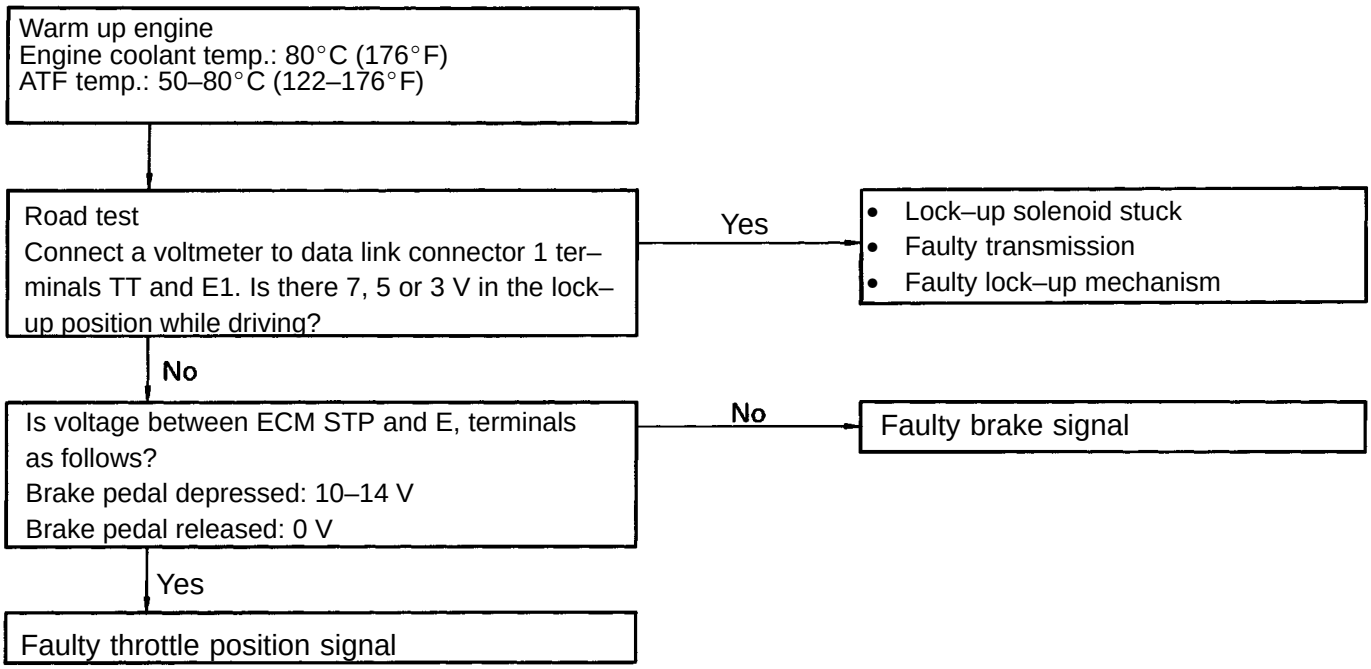

INSPECTION OF TT TERMINAL VOLTAGE

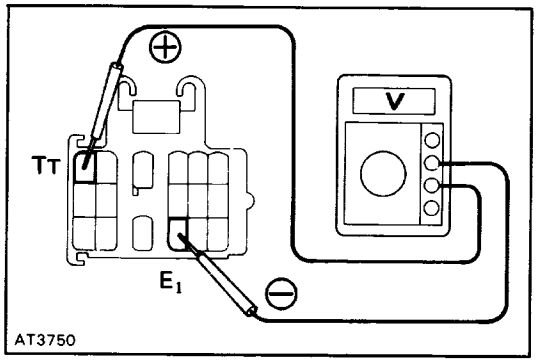

1. INSPECT THROTTLE POSITION SENSOR SIGNAL

(a) Turn the ignition switch to ON. Do not start the engine.

(b) Connect a voltmeter to data link connector 1 terminals TT and El.

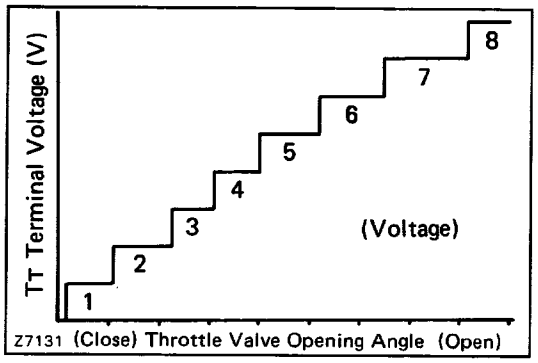

(c) While slowly depressing the accelerator pedal, check that TT terminal voltage rises in sequence.

If the voltage does not change in proportion to the throttle opening angle, there is a malfunction in the throttle position sensor or circuit.

2. INSPECT BRAKE SIGNAL

(a) Depress the accelerator pedal until the TT terminal indicates 8V.

(b) Depress the brake pedal and check the voltage reading from the TT terminal.

Brake pedal depressed ..... 0 v

Brake pedal released ..... 8 V

If not as indicated, there is a malfunction in either the stop light switch or circuit.

3. INSPECT EACH UP–SHIFT POSITION

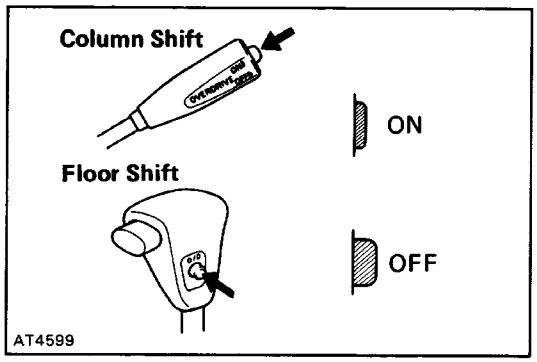

(a) Warm up the engine.

Engine coolant temperature: 80 ° C (176 ° F)

(b) Turn the O/D switch to ”ON”.

(c) Place the pattern select switch in ”Normal” and the shift lever into the D position.

(d) During a road test (above 10 km/h or 6 mph) check that voltage at the TT terminal is as indicated below for each up–shift position.

If the voltage rises from 0 v to 7 v in the sequence shown, the control system is okay.

The chart on the left shows the voltmeter reading and corresponding gears.

T_TTerminal (V)	Gear Position
0	1st
2	2nd
3	2nd Lock-up
4	3rd
5	3rd Lock-up
6	O/D
7	O/D Lock-up

HINT: Determine the gear position by a light shock or change in engine RPM when shifting. The lock–up clutch will turn ON only infrequently during normal 2nd and 3rd gear operation. To trigger this action, press the accelerator pedal to 50% or more of its stroke. At less than 50%, the voltage may change in the sequence 2 V–4 v–6 v–7V.

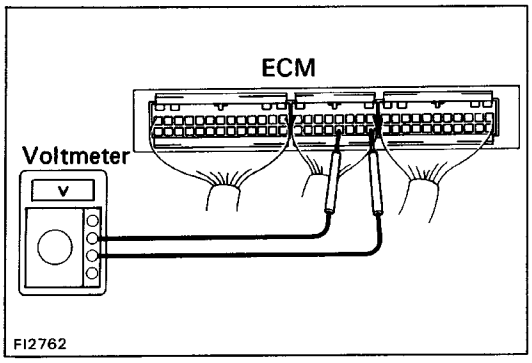

INSPECTION OF ELECTRONIC CONTROL COMPONENTS

1. INSPECT VOLTAGE OF ECM CONNECTOR

(a) Remove the cowl side trim of passenger side.
(b) Turn on the ignition switch.
(c) Measure the voltage at each terminal.

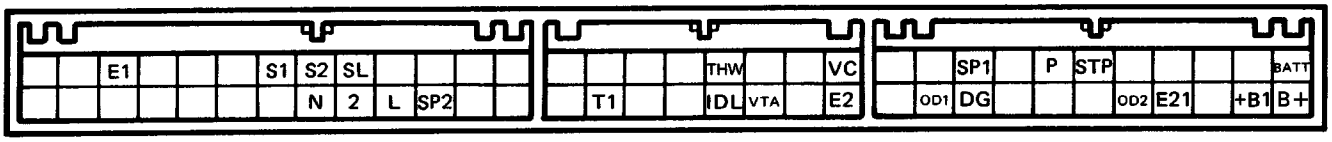

Terminal	Measuring condition		Voltage (V)
S_1 – E_1	–		10 – 14
S_2, S_L – E_1	–		0
P – E_1	PWR pattern		10 – 14
	NORM pattern		0 – 2
STP – E_1	Brake pedal is depressed		10 – 14
	Brake pedal is released		0
THW – E_2 (E_{21})	Engine coolant temp. 80()C (1760F)		0.1 – 1.0
IDL – E_2 (E_{21})	Throttle valve fully closed		0
	Throttle valve open		10 – 14
VTA – E_2 (E_{21})	Throttle valve fully closed		0.1 – 1.0
	Throttle valve fully open		3 – 5
VC – E_2 (E_{21})	–		4 – 6
OD_1 – E_1	–		5
OD_2 – E_1	O/D main switch turned ON		10 – 14
	O/D main switch turned OFF		0
SP_1 – E_1	Cruise control main switch OFF	Standing still	0 or 5
		Vehicle moving	2 – 3
SP_2 – E_1	Standing still		0 or 5
	Vehicle moving		2 – 3

Terminal	Measuring condition	Voltage (V)
N – E_1	N position	10 – 14
	Except N position	0 – 2
2 – E_1	2 position	10 – 14
	Except 2 position	0 – 2
L – E_1	L position	10 – 14
	Except L position	0 – 2
B+ (+B_1) – E_1	–	10 – 14
BATT – E_1	–	10 – 14

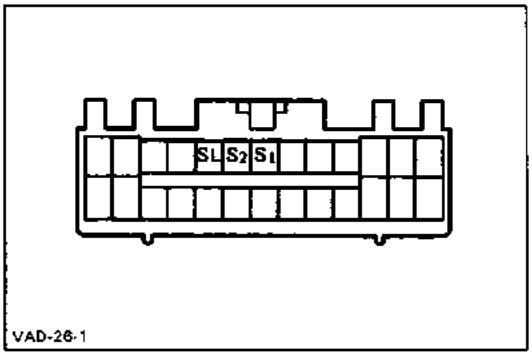

2. INSPECT SOLENOID

(a) Disconnect the connector from ECM.

(b) Measure the resistance between S, S2, SL and ground.

Resistance: 11–15Ω

(c) Apply battery positive voltage to each terminal.

Check that an operation noise can be heard from the solenoid.

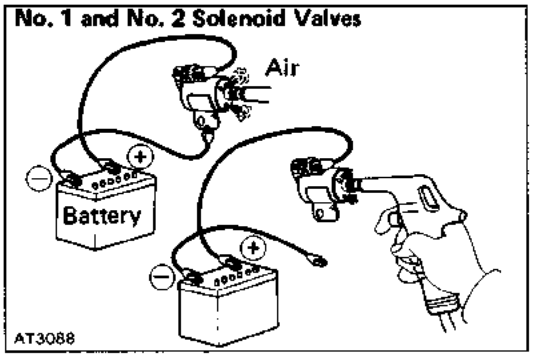

3. CHECK SOLENOID SEALS

If there is foreign material in the solenoid valve, there will be no fluid control even with solenoid operation.

(a) Check No.1 and No.2 solenoid valves.

Check that the solenoid valves do not leak when low–pressure compressed air is applied.

When supply battery positive voltage to the solenoids, check that the solenoid valves open.

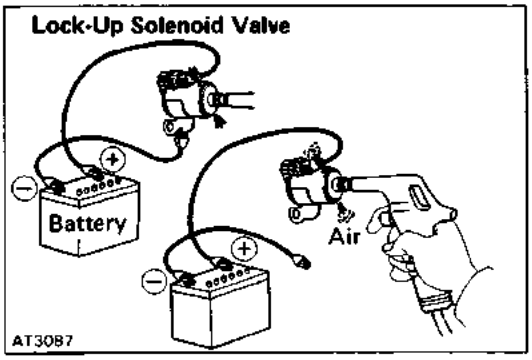

(b) Check the lock–up solenoid valve.

- Applying 490 kPa (5 kgf/cm2, 71 psi) of com–pressed air, check that the solenoid valve opens.
- When supply battery positive voltage to the solenoid, check that the solenoid valve does not leak the air.

If a malfunction is found during voltage inspection (step 1.), inspect the components listed below.

4. INSPECT PARK/NEUTRAL POSITION SWITCH
(See page AT–83)

5. INSPECT THROTTLE POSITION SENSOR

Using an ohmmeter, check the resistance between each terminal.

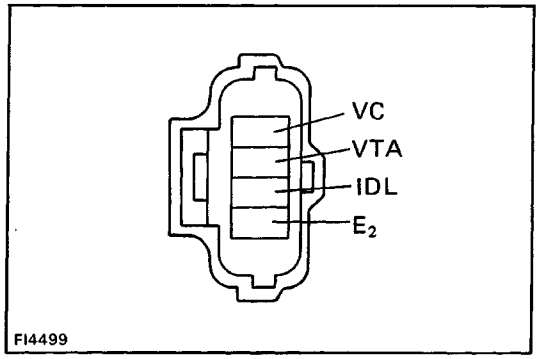

Terminal	Throttle valve condition	Resistance (kΩ)
IDL – E_2	Fully closed	Less than 2.3
	Open	Infinity
VC – E_2	–	3.9 – 9.0
VTA – E_2	Fully closed	0.47 – 6.1
	Fully open	3.1 – 12.1

6. INSPECT NO.2 VEHICLE SPEED SENSOR

(a) Jack up the rear wheel on one side.
(b) Connect an ohmmeter between the terminals.
(c) Spin the wheel and check that the meter needle de– f lects from 0Ω to ∞Ω.

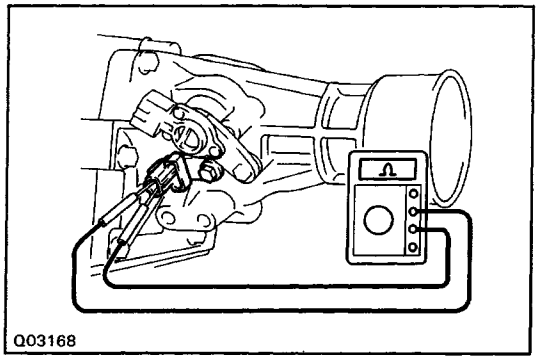

7. INSPECT NO.1 VEHICLE SPEED SENSOR
(See step 6. on page AT–73)

8. INSPECT PATTERN SELECT SWITCH

Using an ohmmeter, check the continuity of terminals for each switch position.

HINT: As there are diodes inside, be careful of the tester probe polarity.

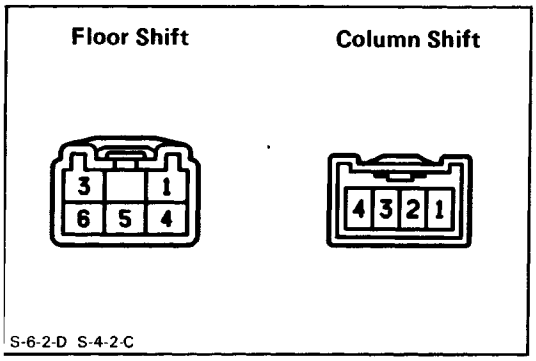

Pattern \ Terminal	Floor shift		Column shift	
	4	6	2	3
PW R	○—○		○—○	
NORM				

9. INSPECT O/D SWITCH '

Using an ohmmeter, check the continuity of the terminals for each switch position.

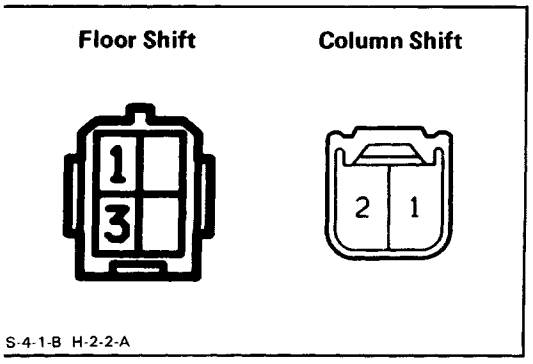

SW position \ Terminal	1	3(2)
ON		
OFF	○—○	

10. INSPECT ENGINE COOLANT TEMPERATURE SENSOR
(See page FI–200)

Mechanical System Tests

STALL TEST

The object of this test is to check the overall performance of the transmission and engine by measuring the stall speeds in the D and R positions.

NOTICE:

- **Perform the test at normal operating fluid temperature (50–80°C or 122–176°F).**
- **Do not continuously run this test longer than 5 seconds.**
- **To ensure safety, conduct this test in a wide, clear, level area, which provides good traction.**
- **The stall test should always be carried out in pairs. One should observe the conditions of wheels or wheel stoppers outside the vehicle while the other is performing the test.**

MEASURE STALL SPEED

(a) Chock the front and rear wheels.
(b) Connect a tachometer to the engine.
(c) Fully apply the parking brake.
(d) Keep your left foot pressed firmly on the brake pedal.
(e) Start the engine.
(f) Shift into the D position. Step all the way down on the accelerator pedal with your right foot. Quickly read the stall speed at this time.

NOTICE: Release the accelerator pedal and stop test if the rear wheels begin to rotate before the engine speed reaches specified stall speed.

Stall speed: C&C 2,200 ±150 RPM

Except: C&C 2,450 ± 150 RPM

(g) Perform the same test in R position.

EVALUATION

(a) If the stall speed is the same for both positions but lower than specified value:
- Engine output may be insufficient
- Stator one–way clutch is not operating properly

HINT: If more than 600 RPM below the specified value, the torque converter clutch could be faulty.

(b) If the stall speed in D position is higher than specified:
- Line pressure too low
- Forward clutch slipping
- No.2 one–way clutch not operating properly
- O/D one–way clutch not operating properly

(c) If the stall speed in R position is higher than specified:
- Line pressure too low
- Direct clutch slipping
- First and reverse brake slipping
- O/D one–way clutch not operating properly

(d) If the stall speed in both R and D positions are higher than specified:
- Line pressure too low
- Improper fluid level
- O/D one–way clutch not operating properly

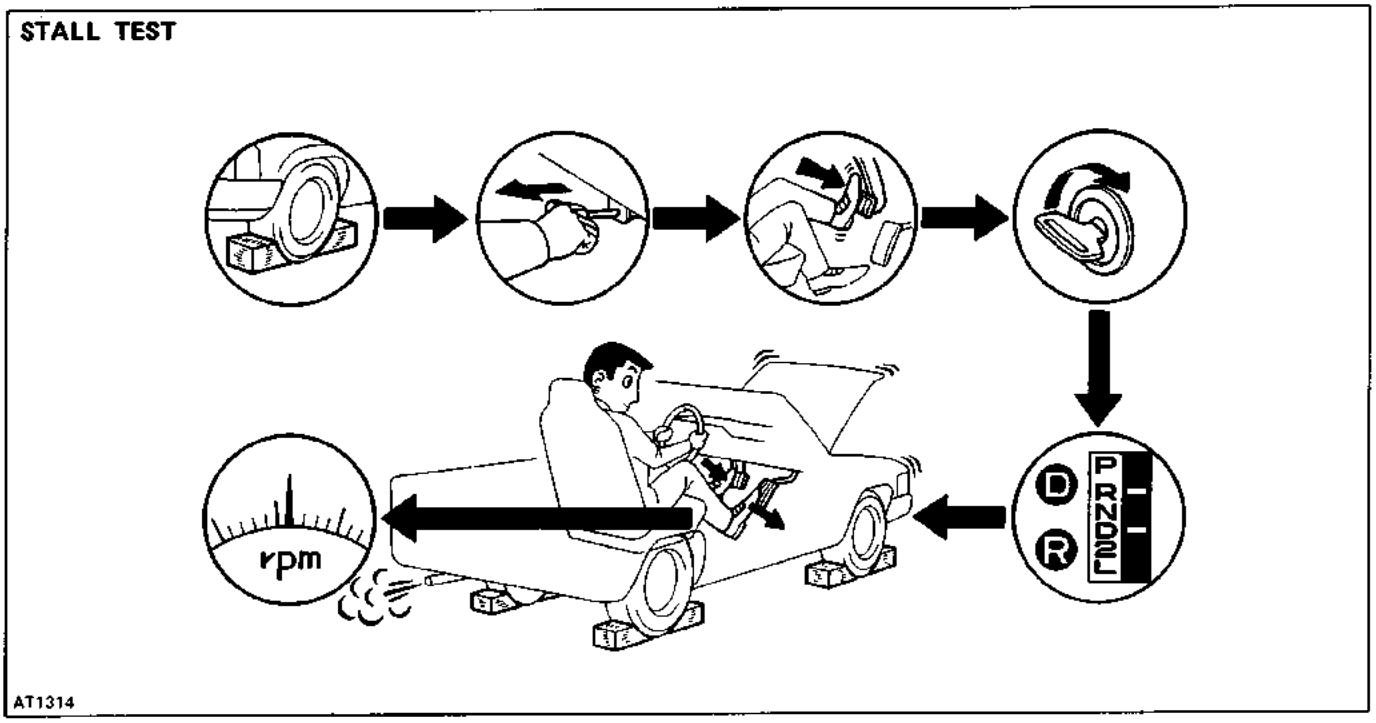

TIME LAG TEST

When the shift lever is shifted while the engine is idling, there will be a certain time lapse or lag before the shock can be felt. This is used for checking the condition of the O/D direct clutch, forward clutch, direct clutch and first and reverse brake.

NOTICE:

- **Perform the test at normal operating fluid temperature (50–80°C or 122–176°F).**
- **Be sure to allow one minute interval between tests.**
- **Make three measurements and take the average value.**

MEASURE TIME LAG

(a) Fully apply the parking brake.

(b) Start the engine and check the idle speed.
Idle speed: 800 RPM
(N position)

(c) Shift the shift lever from N to D position. Using a stop watch, measure the time it takes from shifting the lever until the shock is felt.
Time lag: Less than 1.2 seconds

(d) In same manner, measure the time lag for N–Y R.
Time lag: Less than 1.5 seconds

EVALUATION

(a) If N–D time lag is longer than specified:
Line pressure too low
Forward clutch worn
O/D one–way clutch not operating properly

(b) If N–R time lag is longer than specified:
Line pressure too low
Direct clutch worn
First and reverse brake worn
O/D one–way clutch not operating properly

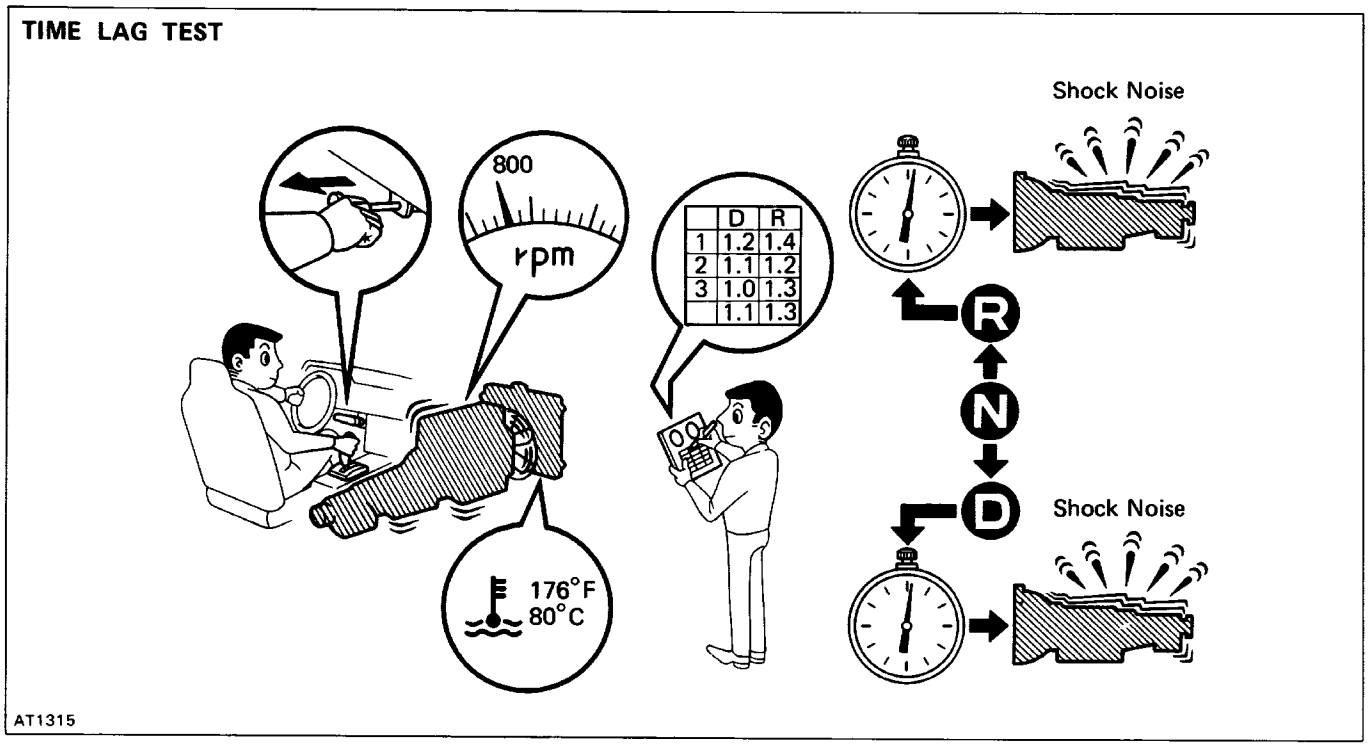

HYDRAULIC TEST

PREPARATION

(a) Warm up the transmission fluid.

(b) Remove the transmission case test plug and connect the hydraulic pressure gauge.
SST 09992–00094 (Oil pressure gauge)

NOTICE:

Perform the test at normal operating fluid temperature (50–80°C or 122–176°F).

The line pressure test should always be carried out in pairs. One should observe the conditions of wheels or wheel stoppers outside the vehicle while the other is performing the test.

MEASURE LINE PRESSURE

(a) Fully apply the parking brake and chock the four wheels.

(b) Start the engine and check idling rpm.

(c) Keep your left foot pressed firmly on the brake pedal and shift into D position.

(d) Measure the line pressure when the engine is idling.

(e) Press the accelerator pedal all the way down. Quickly read the highest line pressure when engine speed reaches stall speed.

NOTICE: Release the accelerator pedal and stop test if the rear wheels begin to rotate before the en–
gine speed reaches specified stall speed.

(f) In the same manner, perform the test in R position.

kPa (kgf/cm2,psi)

D position		R position	
Idling	Stall	Idling	Stall
363 – 422 (3.7 – 4.3, 53 – 61)	932 – 1,178 (9.5 – 12.0, 135 – 171)	490 – 588 (5.0 – 6.0, 71 – 85)	1,294 – 1,638 (13.2 – 16.7, 188 – 238)

If the measured pressures are not up to specified values, recheck the throttle cable adjustment and perform a retest.

EVALUATION

(a) If the measured values at all positions are higher than specified:
- Throttle cable out of adjustment
- Throttle valve defective
- Regulator valve defective

(b) If the measured values at all positions are lower than specified:
- Throttle cable out of adjustment
- Throttle valve defective
- Regulator valve defective
- Oil pump defective
- O/D direct clutch defective

(c) If pressure is low in the D position only:
- D position circuit fluid leakage
- Forward clutch defective

(d) If pressure is low in the R position only:
- R position circuit fluid leakage
- Direct clutch defective
- First and reverse brake defective

HYDRAULIC TEST

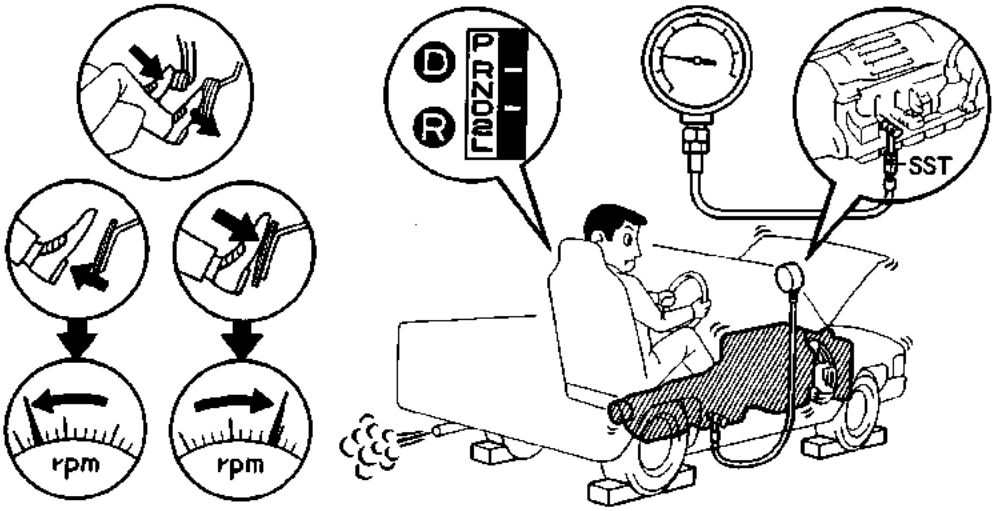

AT1316

ROAD TEST

NOTICE: Perform the test at normal operating fluid temperature (50–80°C or 122–176°F).

1. D POSITION TEST IN NORM AND PWR PATTERN RANGES

Shift into the D position and hold the accelerator pedal constant at the full throttle valve opening posiiton.

Check the following:

(a) 1–2, 2–3 and 3–OID up–shifts should take place, and shift points should conform to those shown in the automatic shift schedule.

Conduct a test under both Normal and Power patterns.

HINT: There is no O/D up–shift or lock–up when the engine coolant temp. is below 70°C (158°F).

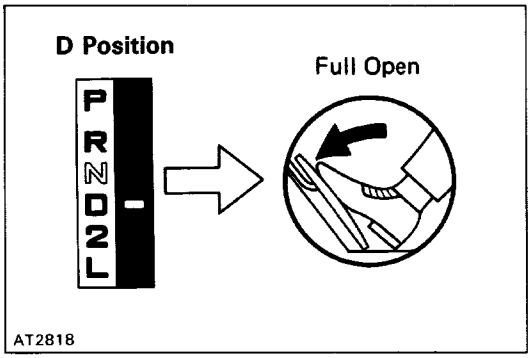

EVALUATION

(1) If there is no 1–2 up–shift:

No.2 solenoid is stuck

1–2 shift valve is stuck

(2) If there is no 2–3 up–shift:

No.1 solenoid is stuck

2–3 shift valve is stuck

(3) If there is no 3–O/D up–shift:

3–4 shift valve is stuck

(4) If the shift point is defective:

Throttle valve, 1–2 shift valve, 2–3 shift valve, 3–4 shift valve etc., are defective

(5) If the lock–up is defective:

Lock–up solenoid is stuck

Lock–up relay valve is stuck

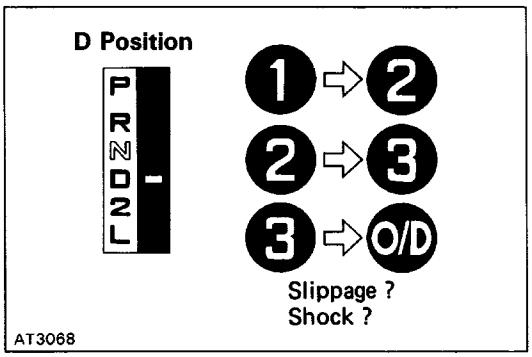

(b) In the same manner, check the shock and slip at the 1–2, 2–3, and 3–O/D up–shifts.

EVALUATION

If the shock is excessive:

Line pressure is too high

Accumulator is defective

Check ball is defective

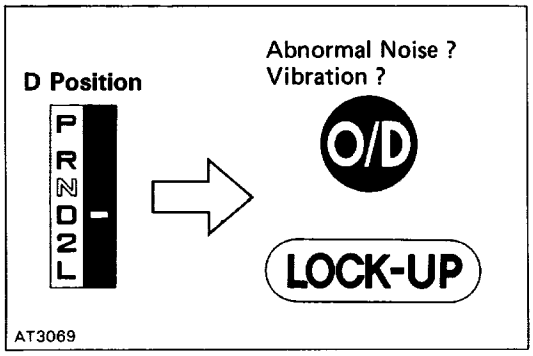

(c) Run at the D position lock–up or O/D gear and check for abnormal noise and vibration.

HINT: The check for the cause of abnormal noise and vibration must be made with extreme care as it could also be due to loss of balance in the propeller shaft, differen tial, torque converter clutch, etc.

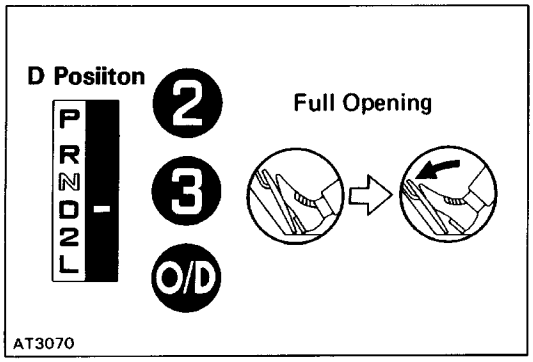

(d) While running in the D position, 2nd, 3rd and O/D gears, check to see the possible kickdown vehicle speed limits for 2 → 1, 3 → 2 and O/D → 3 kickdowns conform to those indicated on the automatic shift schedule.

(e) Check for abnormal shock and slip at kick–down.

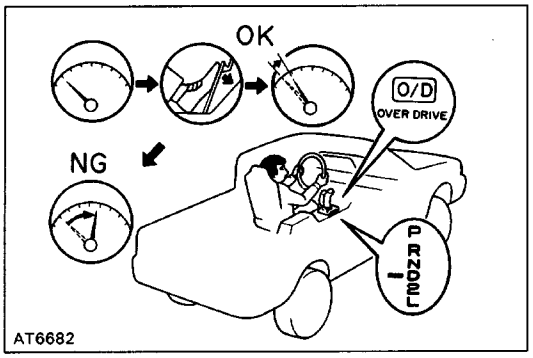

(f) Check for the lock–up mechanism.

(1) Drive in D position, O/D gear, at a steady speed (lock–up ON) of about 75 km/h¿47 mph).

(2) Lightly depress the accelerator pedal and check that the engine rpm does not change abruptly.

If there is a big jump in engine rpm, there is no lock–up.

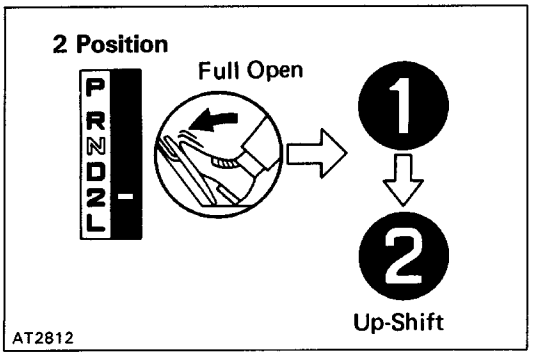

2. 2 POSITION TEST

Shift into the 2 position and, while driving with the ac–celerator pedal held constantly at the full throttle valve opening position, push in one of the pattern selectors and check on the following points.

(a) Check to see that the 1–2 up–shift takes place and that the shift point conforms to it shown on the au–tomatic shift schedule.

HINT:

There is no O/D up–shift and lock–up in the 2 position.

To prevent overrun, the transmission up–shifts into 3rd gear at around 100 km/h (62 mph) or more.

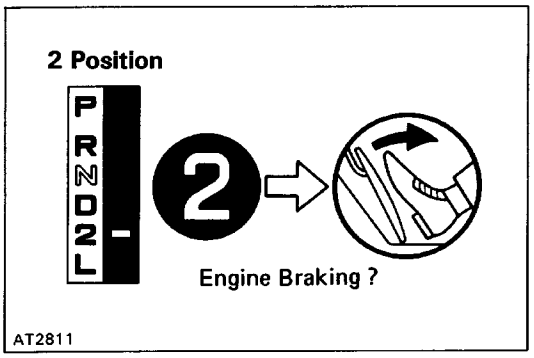

(b) While running in the 2 position and 2nd gear, release the accelerator pedal and check the engine braking effect.

EVALUATION

If there is no engine braking effect:

Second coast brake is defective

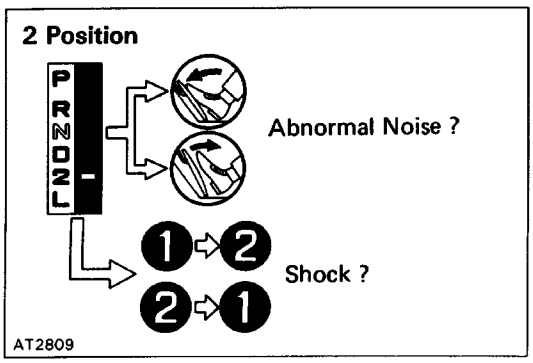

(c) Check for abnormal noise at acceleration and decel–eration, and for shock at up–shift and down–shift.

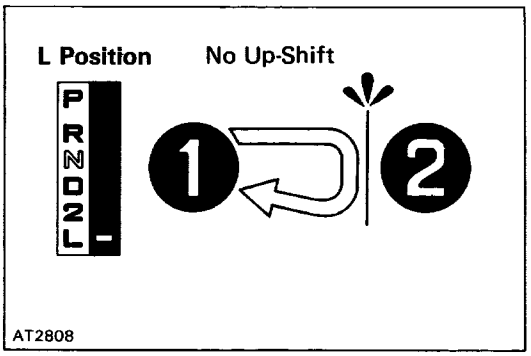

3. L POSITION TEST

(a) While running in the L position , check to see that there is no up–shift to 2nd gear.

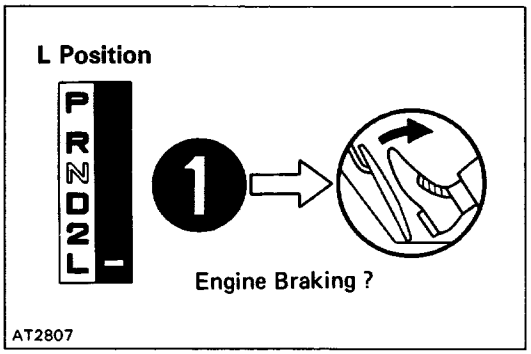

(b) While running in the L position, release the ac–celerator pedal and check the engine braking effect.

EVALUATION

If there is no engine braking effect:

First and reverse brake is defective

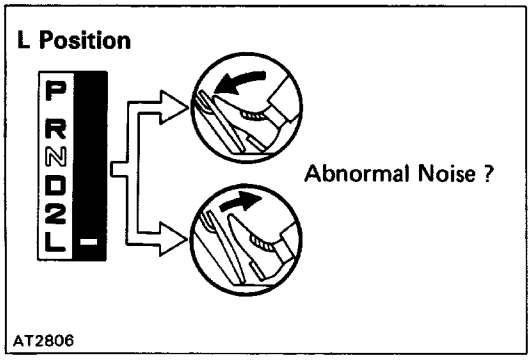

(c) Check for abnormal noise during acceleration and deceleration.

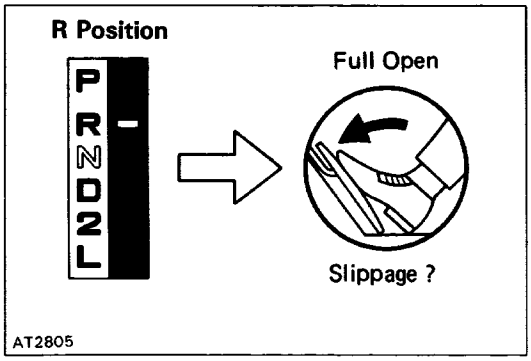

4. R POSITION TEST

Shift into the R position and, while starting at wide open throttle, check for slipping.

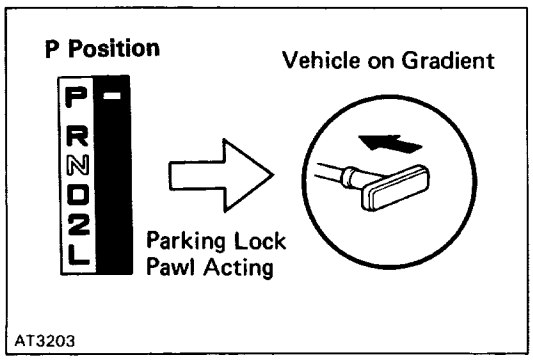

5. P POSITION TEST

Stop the vehicle on a gradient (more than 50) and after shifting into the P position, release the parking brake. Then check to see that the parking lock pawl holds the vehicle in place.

Automatic Shift Schedule

CBU: Tire size P205175R14, P215/65R15

(Differential gear ratio: 3.417)

		Throttle valve fully open [ ] Fully closed km/h (mph)							
		1→2	2→3	3→O/D	[3→O/D]	[O/D→3]	O/D→3	3→2	2→1
D position	NORM	61–66 (38–41)	108–117 (67–73)	143–152 (89–94)	43–48 (27–30)	26–30 (16–19)	136–145 (85–90)	100–105 (62–65)	44–49 (27–30)
	PW R	61–66 (38–41)	119–127 (74–79)	147–156 (91–97)	47–52 (29–32)	26–30 (16–19)	140–149 (87–93)	110–119 (68–74)	44–49 (27–30)
2 position	NORM PWR	53–57 (33–35)	126–135 (78–84)	–	–	–	–	119–128 (74–80)	47–52 (29–32)
L position	NORM PW R	–	–	–	–	–	–	101–110 (63–68)	57–62 (35–39)

		Throttle valve opening 5% km/h (mph)					
		Lock–up ON			Lock–up OFF		
		2nd	*3rd	O/D	2nd	*3rd	O/D
D position	NORM	–	79 – 83 (49 – 52)	79 – 83 (49 – 52)	–	71 – 76 (44 – 47)	68 – 73 (42 – 45)
	PW R	–	61 – 66 (38 – 41)	79 – 83 (49 – 52)	–	68 – 73 (42 – 45)	68 – 76 (42 – 47)

* O/D switch OFF

CBU : Tire size 185R14–8

(Differential gear ratio: 3.9001

		Throttle valve fully open [ ] Fully closed km/h (mph)							
		1→2	2→3	3→O/D	[3→O/D]	[O/D→3]	O/D→3	3→2	2→1
D position	NORM	52–56 (32–35)	93–100 (45–62)	135–142 (84–88)	37–41 (23–25)	22–26 (14–16)	130–136 (81–85)	86–90 (53–56)	43–47 (27–29)
	PW R	52–56 (32–35)	102–109 (63–68)	148–154 (92–96)	40–44 (25–27)	22–26 (14–16)	141–148 (88–92)	95–102 (59–63)	43–47 (27–29)
2 position	NORM PW R	45–49 (28–30)	108–115 (67–71)	–	–	–	–	102–109 (63–68)	40–44 (25–27)
L position	NORM PW R	–	–	–	–	–	–	87–94 (54–58)	49–53 (30–33)

		Throttle valve opening 5% km/h (mph)					
		Lock–up ON			Lock–up OFF		
		2nd	*3rd	O/D	2nd	*3rd	O/D
D position	NORM	–	67 – 71 (42 – 44)	68 – 71 (42 – 44)	–	61 – 65 (38 – 40)	58 – 62 (36 – 39)
	PW R	–	58 – 62 (36 – 39)	68 – 71 (42 – 44)	–	52 – 56 (32 – 35)	61 – 65 (38 – 40)

* : O/D switch OFF

C & C: Tire size 185R14–8, 185R14–6 (Double tire) **(Differential gear ratio: 4.100)**

		Throttle valve fully open [ ] Fully closed km/h (mph)							
		1→2	2→3	3→O/D	[3→O/D]	[O/D→3]	O/D→3	3→2	2→1
D position	NORM	43–47 (27–29)	84–91 (52–57)	129–135 (80–84)	73–77 (45–48)	21–25 (13–16)	123–130 (76–81)	77–81 (48–50)	38–42 (24–26)
	PWR	51–55 (32–34)	97–103 (60–64)	132–138 (82–86)	73–77 (45–48)	21–25 (13–16)	126–132 (78–82)	90–97 (56–60)	45–48 (28–30)
2 position	NORM PW R	43–47 (27–29)	103–110 (64–68)	–	–	–	–	97–104 (60–65)	38–42 (24–26)
L position	NORM PW R	–	–	–	–	–	–	83–89 (52–55)	47–51 (29–32)

		Throttle valve opening 5% km/h (mph)					
		Lock–up ON			Lock–up OFF		
		2nd	*3rd	O/D	2nd	*3rd	O/D
D position	NORM	–	73 – 77 (45 – 48)	73 – 77 (45 – 48)	–	61 – 65 (38 – 40)	67 – 71 (42 – 44)
	PW R	–	73 – 77 (45 – 48)	73 – 77 (45 – 48)	–	67 – 71 (42 – 44)	67 – 71 (42 – 44)

* : O/D switch OFF

C & C: Tire size 185R14–6 (Double tire) **(Differential gear ratio: 4.300)**

		Throttle valve fully open [ ] Fully closed km/h (mph)							
		1→2	2→3	3→O/D	[3→O/D]	[O/D→3]	O/D→3	3→2	2→1
D position	NORM	41–45 (25–28)	80–87 (50–54)	123–129 (76–80)	69 – 73 (43 – 45)	20–24 (12–15)	117–124 (73–77)	73–77 (45–48)	37–40 (23–25)
	PW R	49–53 (30–33)	92–99 (57–62)	126–132 (78–82)	69 – 73 (43 – 45)	20–24 (12–15)	120–126 (75–78)	86–92 (53–57)	42–46 (26–29)
2 position	NORM PWR	41–45 (25–28)	98–105 (61–65)	–	–	–	–	93–99 (58–62)	37–40 (23–25)
L position	NORM PW R	–	–	–	–	–	–	79–85 (49–53)	45–48 (28–30)

		Throttle valve opening 5% km/h (mph)					
		Lock–up ON			Lock–up OFF		
		2nd	*3rd	O/D	2nd	*3rd	O/D
D position	NORM	–	69 – 73 (43 – 45)	69 – 73 (43 – 45)	–	58 – 62 (36 – 39)	64 – 68 (40 – 42)
	PW R	–	69 – 73 (43 – 45)	69 – 73 (43 – 45)	–	64 – 68 (40 – 42)	64 – 68 (40 – 42)

* : O/D switch OFF

HINT:

(1) Lock–up will not occur in 2nd gear unless the throttle valve opening is greater than 50%.
(2) There is no lock–up in the 2 and L positions.
(3) In the following cases, the lock–up will be released regardless of the lock–up pattern.
- When the throttle is completely closed.
- When the brake light switch is ON.

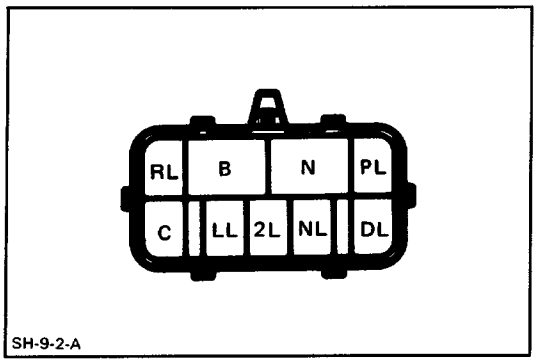

Park Neutral Position Switch

INSPECTION OF PARK/NEUTRAL POSIITON SWITCH

Inspect that there is continuity between each terminals.

Shift Position \ Terminal	B	N	PL	RL	NL	DL	2L	LL	C
P	○	○	○						○
R				○					○
N	○	○			○				○
D						○			○
2							○		○
L								○	○

ON–VEHICLE REPAIR

Valve Body

REMOVAL OF VALVE BODY

1. CLEAN TRANSMISSION EXTERIOR

To prevent contamination, clean the exterior of the transmission.

2. DRAIN TRANSMISSION FLUID

Remove the drain plug and the fluid into a suitable container.

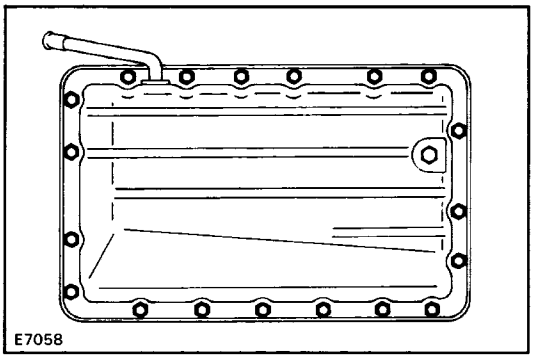

3. REMOVE OIL PAN

NOTICE: Some fluid will remain in the oil pan. Be careful not to damage the filler tube and O–ring.

(a) Remove the nineteen bolts.

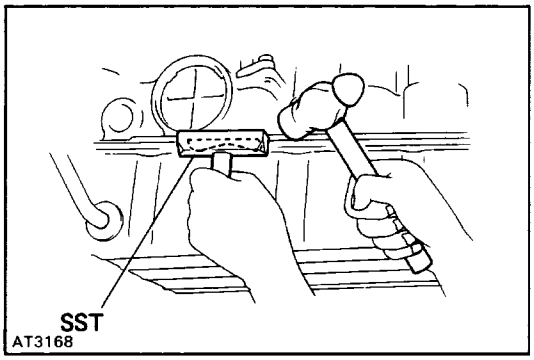

(b) Install the blade of SST between the transmission case and oil pan, cut off applied sealer and then remove the oil pan.
SST 09032–00100

NOTICE: When removing the oil pan, be careful not to damage the oil pan flange.

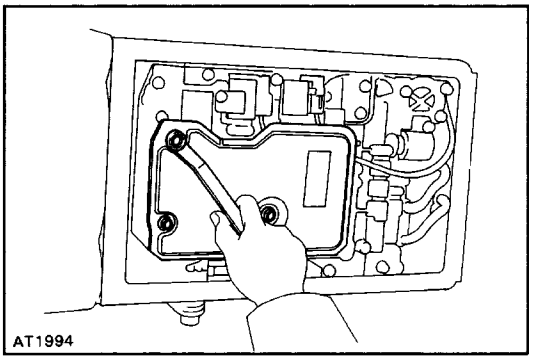

4. REMOVE OIL STRAINER

Remove the six bolts, and the oil strainer.

NOTICE: Be careful as some oil will come out with the filter

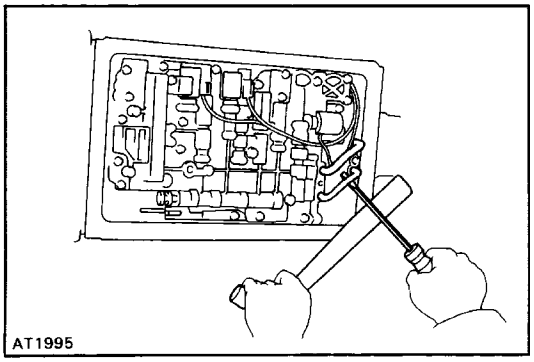

5. REMOVE OIL TUBES

Pry up both tube ends with a large screwdriver and remove the tubes.

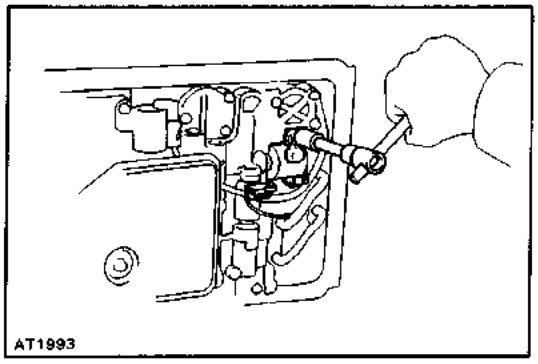

6. WHEN REPLACING SOLENOIDS

(a) Disconnect the connectors from the solenoids.
(b) Remove the solenoid mounting bolts.
(c) Remove the solenoids.

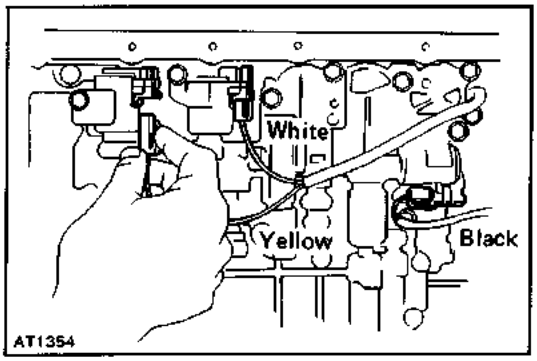

7. DISCONNECT SOLENOID CONNECTORS

Disconnect the three connectors from No.1, No.2 and lock–up solenoids.

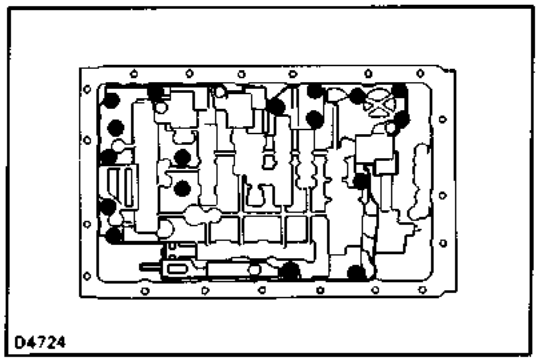

8. REMOVE VALVE BODY

(a) Remove the seventeen bolts.

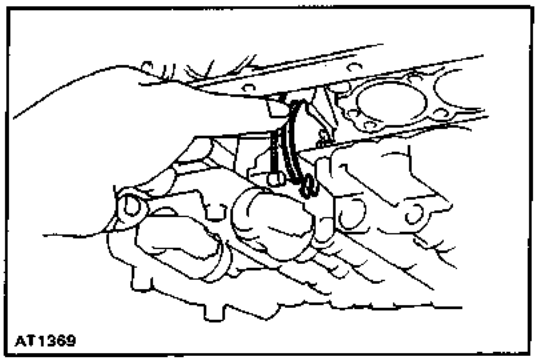

(b) Disconnect the throttle cable from the cam and re–move the valve body.

INSTALLATION OF VALVE BODY

1. CONNECT THROTTLE CABLE TO CAM

Push the cable fitting into the cam.

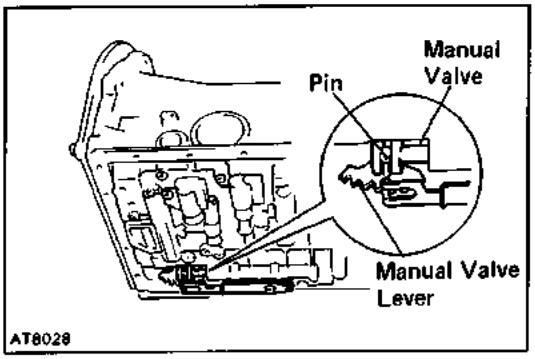

2. INSTALL VALVE BODY

(a) Align the manual valve lever with the manual valve.

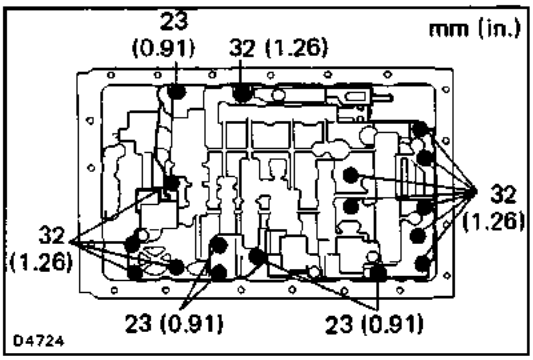

(b) Finger tighten the all bolts first. Then tighten the bolts evenly.

HINT: Each bolt length (mm, in.) is indicated in the figure.

Torque: 10 N–m (100 kgf–cm, 7 ft–lbf)

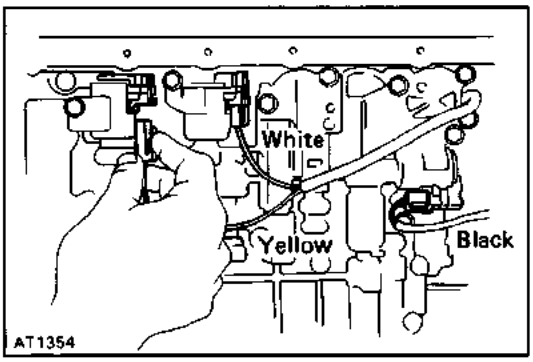

3. CONNECT SOLENOID WIRING

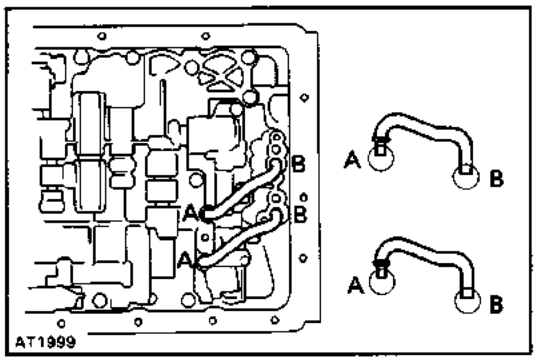

4. INSTALL OIL TUBES

Tap the tubes with a plastic hammer to install them into the positions in the figure.

NOTICE: Be careful not to bend or damage the tubes.

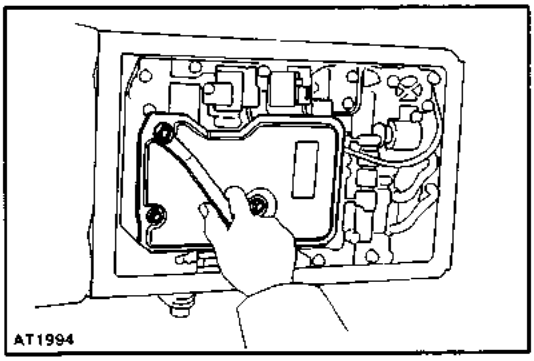

5. INSTALL OIL STRAINER

Be sure the screen is clean. Torque the bolts.

Torque: 5.4 N–m (55 kgf–cm, 48 in.¿lbf)

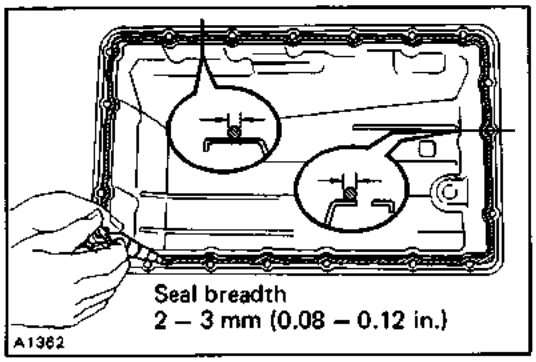

6. INSTALL OIL PAN

(a) Remove any packing material and be careful not to drop oil on the contacting surfaces of the transrris–sion case and oil pan.

(b) Apply seal packing to the oil pan shown in the figure.

Seal packing: Part No. 08826–00090, THREE BOND 1281 or equivalent

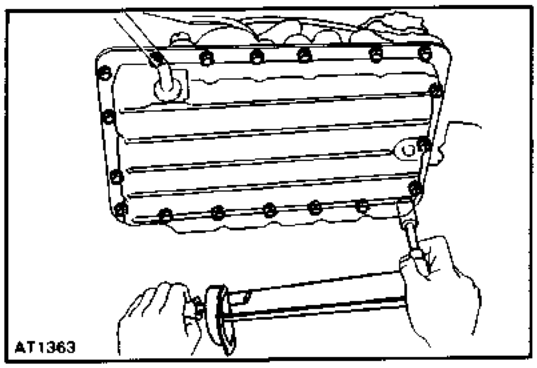

(c) Install and torque the nineteen bolts.
Torque:. 7.4 N–m (70 kgf–cm, 65 in.–lbf)

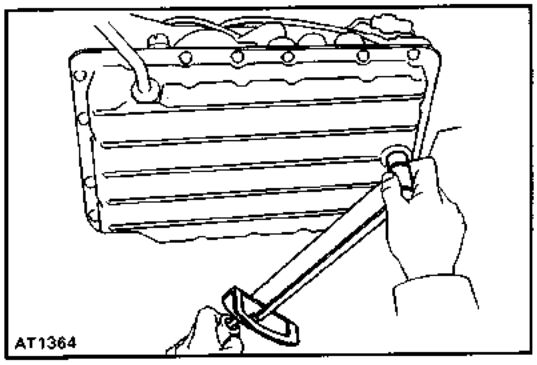

7. INSTALL DRAIN PLUG
Torque the drain plug.
Torque: 20 N–m (205 kgf–cm,15 ft–lbf)

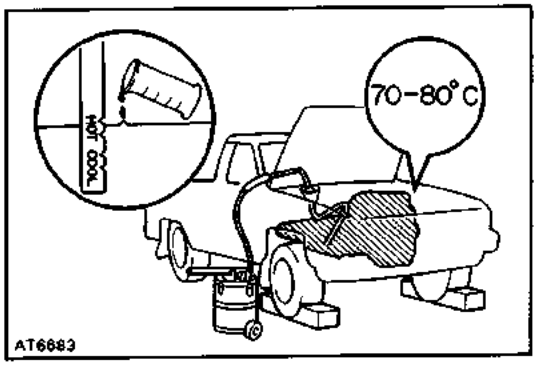

8. FILL TRANSMISSION WITH ATF
Add only about two liters of ATF. Start the engine and shift through all the positions. Check the fluid level and add as necessary.
NOTICE: Do not overfill.
Fluid type: ATF DEXRON® II

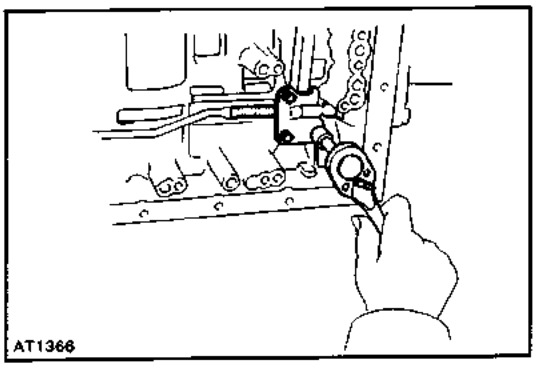

Parking Lock Pawl

REMOVAL OF PARKING LOCK PAWL

1. **REMOVE VALVE BODY (See page AT–84)**
2. **REMOVE PARKING LOCK PAWL BRACKET**
   Remove the three bolts and the bracket.

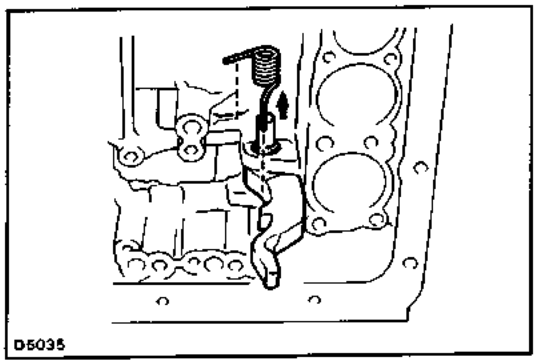

3. **REMOVE SPRING FROM PARKING LOCK PAWL PIVOT PIN**
4. **REMOVE PIVOT PIN AND PARKING LOCK PAWL**

INSTALLATION OF PARKING LOCK PAWL

1. **INSTALL PARKING LOCK PAWL AND PIVOT PIN**
2. **INSTALL SPRING**

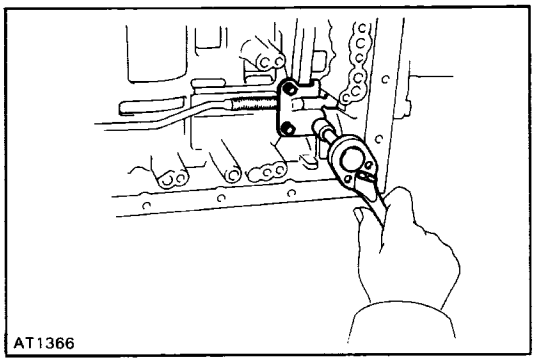

3. INSTALL PARKING LOCK PAWL BRACKET

(a) Push lock rod fully toward.
(b) Install the three bolts finger tight.
(c) Check that the pawl operates smoothly.
(d) Torque the bolts.

Torque: 7.4 N–m (70 kgf–cm,65 in.¿lbf)

4. INSTALL VALVE BODY (See page AT–85)

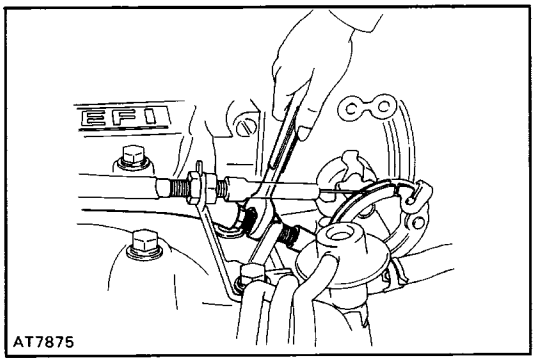

Throttle Cable

REMOVAL OF THROTTLE CABLE

1. DISCONNECT THROTTLE CABLE

(a) Disconnect the cable housing from the bracket.
(b) Disconnect the cable from the throttle linkage.

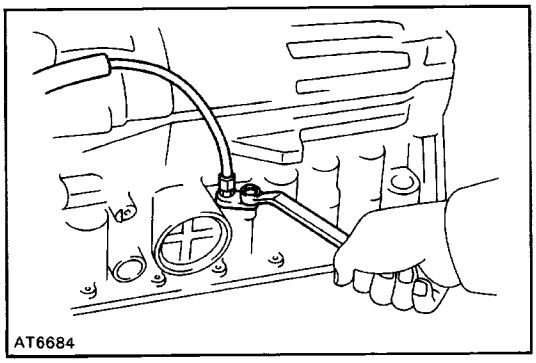

2. REMOVE VALVE BODY (See page AT–84)

3. PUSH THROTTLE CABLE OUT OF TRANSMISSION CASE

Remove the retaining bolt and pull out the throttle cable.

INSTALLATION OF THROTTLE CABLE

1. INSTALL CABLE IN TRANSMISSION CASE

Install the retaining bolt and push in the throttle cable.

2. INSTALL VALVE BODY (See page AT–85)

3. IF THROTTLE CABLE IS NEW, STAKE STOPPER ON INNER CABLE

(a) Pull the inner cable lightly until a slight resistance is felt, and hold it.
(b) Stake the stopper as shown, 0.8–1.5 mm (0.031 –0.059 in.) in width.

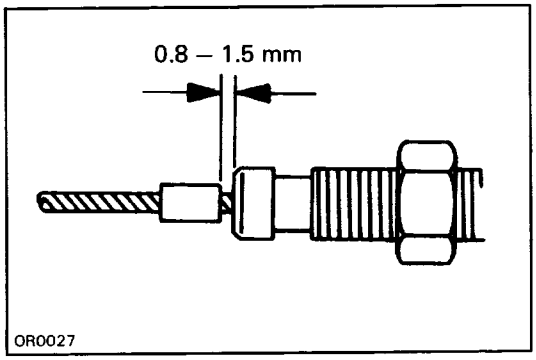

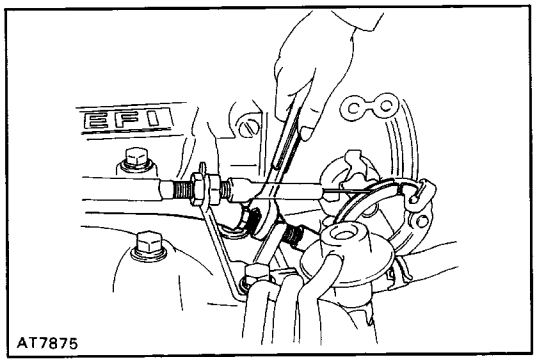

4. CONNECT THROTTLE CABLE

(a) Connect the cable to the throttle linkage.
(b) Connect the cable housing to the bracket.

5. ADJUST THROTTLE CABLE (See page AT–60)

6. TEST DRIVE VEHICLE

Extension Housing
REPLACEMENT OF OIL SEAL

1. RAISE VEHICLE, AND POSITION PAN TO CATCH ANY FLUID THAT MAY DRIP

2. REMOVE PROPELLER SHAFT
(See page PR–3)

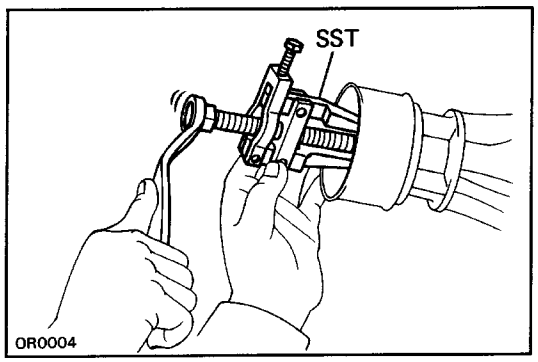

3. REMOVE REAR OIL SEAL

NOTICE: Clean the rear extension housing before removing the seal.

Using SST, remove the oil seal.
SST 09308–10010

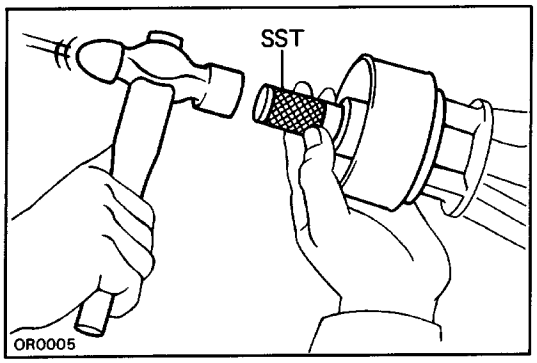

4. INSTALL NEW OIL SEAL

Using SST, drive in a new oil seal as far as it will go.
SST 0932 5–20010

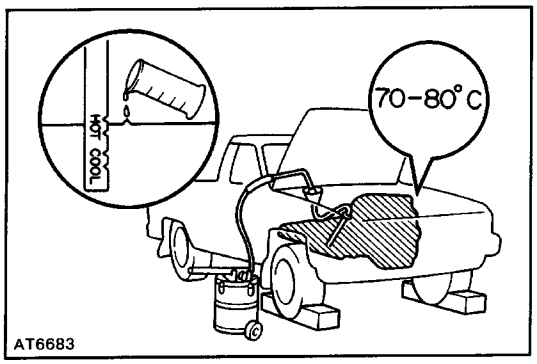

5. INSTALL PROPELLER SHAFT
(See page PR–3)

6. LOWER VEHICLE AND CHECK FLUID LEVEL

Start the engine, shift the shift lever into each position and, then check the fluid level with the transmission in P position.

Add fluid as necessary.
NOTICE: Do not overfill.
Fluid type: ATF DEXRON®II

REMOVAL OF EXTENSION HOUSING

1. RAISE VEHICLE AND POSITION PAN TO CATCH ANY FLUID THAT MAY DRIP

2. REMOVE PROPELLER SHAFT
(See page PR–3)

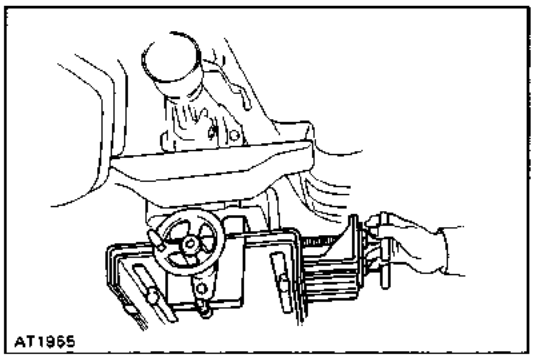

3. JACK UP TRANSMISSION SLIGHTLY

Securely support the transmission on a transmission jack. Lift the transmission slightly to remove weight from the rear support member.

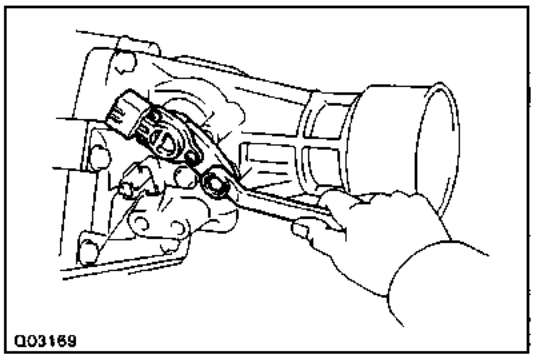

4. REMOVE NO. 1 VEHICLE SPEED SENSOR

(a) Disconnect the connector.
(b) Remove the bolt and pry out the No. 1 vehicle speed sensor with a screwdriver.
(c) Remove the 0–ring from the sensor.

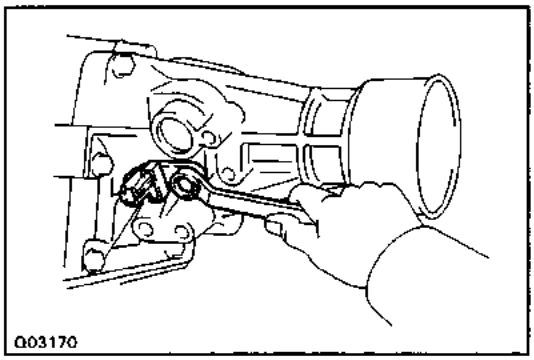

5. REMOVE NO.2 VEHICLE SPEED SENSOR

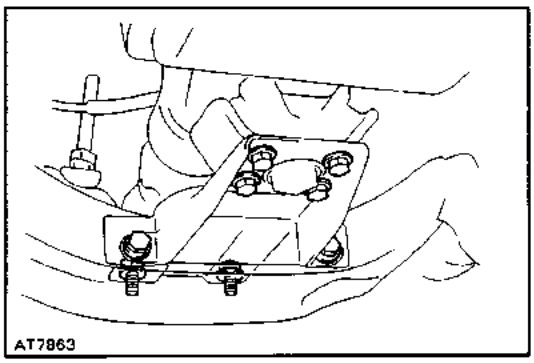

6. REMOVE ENGINE REAR MOUNTING FROM BRACKET

Remove eight bolts from the bracket.

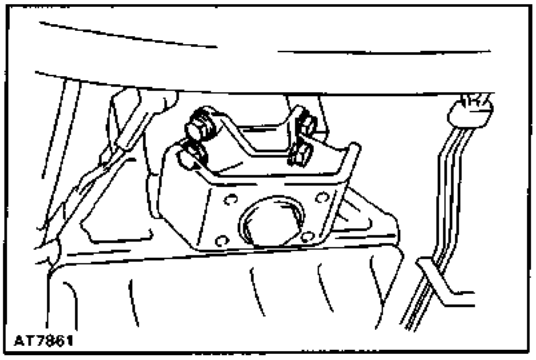

7. REMOVE ENGINE REAR MOUNTING FROM EXTENSION HOUSING

Remove four bolts and the engine rear mounting from the extension housing.

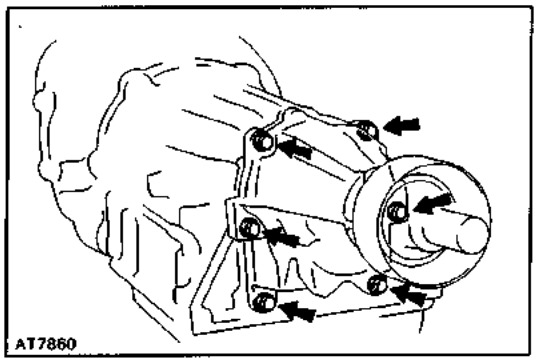

8. REMOVE EXTENSION HOUSING AND GASKET

Remove the six bolts. If necessary, tap the extension housing with a plastic hammer or wooden block to loosen it.

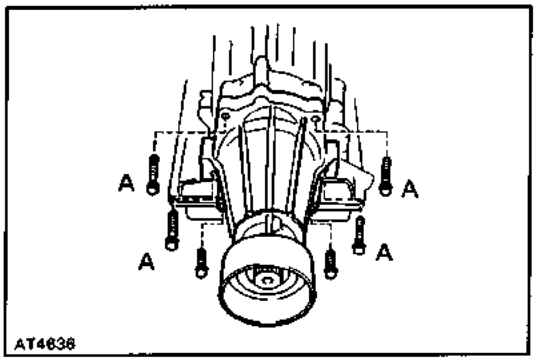

INSTALLATION OF EXTENSION HOUSING

1. INSTALL NEW GASKET AND EXTENSION HOUSING ON TRANSMISSION

(a) Clean the threads of the A bolt and bolt hole.

(b) Coat the threads of the A bolt with sealant.

Sealant: Part No. 08833–00080, THREE BOND 1344, LOCTITE 242 or equivalent

(c) Install the extension housing over a new gasket with bolts, and then torque them.

HINT: The two lower bolts are shorter.

Torque: 34 N–m (345 kgf–cm, 25 ft–lbf)

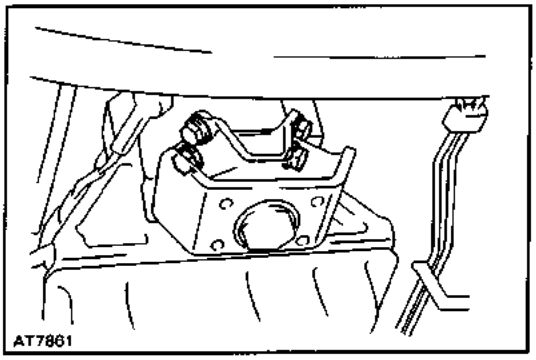

2. INSTALL ENGINE REAR MOUNTING

(a) Install the engine rear mounting to the extension housing. Tighten the four bolts.

Torque: 25 N–m (250 kgf–cm, 18 ft–lbf)

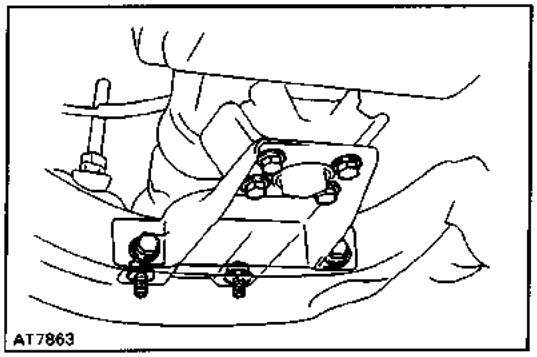

(b) Connect the bracket to the rear mounting and tighten the four bolts.

Torque: 13 N–m (130 kgf–cm, 9 ft–lbf)

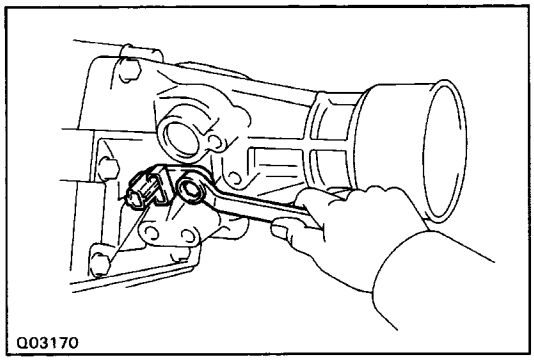

3. INSTALL NO.2 VEHICLE SPEED SENSOR

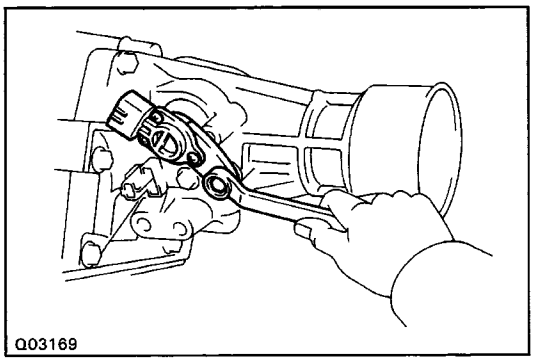

4. INSTALL PROPELLER SHAFT
(See page PR–3)

5. INSTALL NO. 1 VEHICLE SPEED SENSOR
(a) Install a new O–ring on the sensor.
(b) Install the No. 1 vehicle speed sensor.

6. CONNECT CONNECTOR

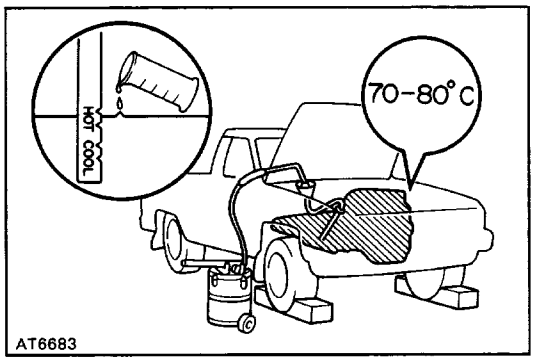

7. LOWER VEHICLE AND CHECK FLUID LEVEL
Start the engine, shift the shift lever into each position, and then check the fluid level with the transmission in P position.
Add fluid as necessary.
NOTICE: Do not overfill.
Fluid type: ATF DEXRON® 11

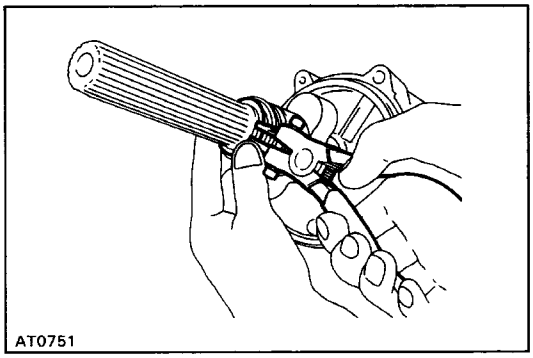

Sensor Rotor

REMOVAL OF SENSOR ROTOR

1. REMOVE EXTENSION HOUSING
(See page AT–90)

2. REMOVE SPEEDOMETER DRIVE GEAR
(a) Using snap ring pliers, remove the snap ring.
(b) Slide off the speedometer drive gear.
(e) Remove the lock ball.

3. REMOVE SENSOR ROTOR FROM OUTPUT SHAFT

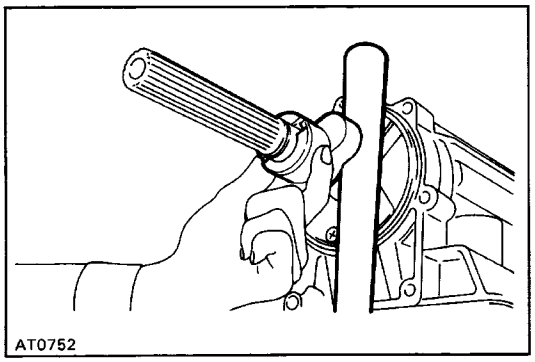

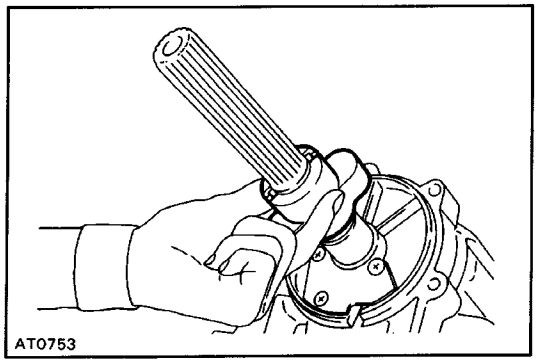

INSTALLATION OF SENSOR ROTOR

1. INSTALL SENSOR ROTOR ON OUTPUT SHAFT

(a) Make sure that the key is installed in the groove.

(b) Install the sensor rotor on the shaft.

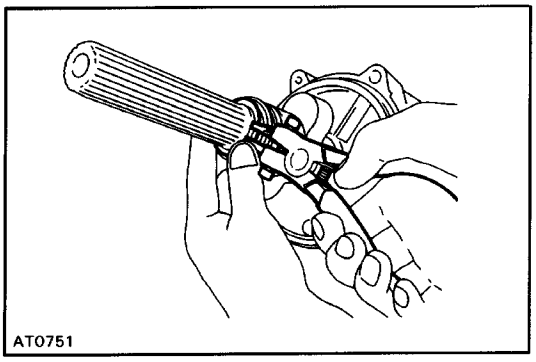

2. INSTALL SPEEDOMETER DRIVE GEAR

(a) Slide the lock ball and the speedometer drive gear on the output shaft.

(b) Using snap ring pliers, install the snap ring.

3. INSTALL EXTENSION HOUSING

(See page AT–91)

REMOVAL AND INSTALLATION OF TRANSMISSION

Remove and install the parts as shown.

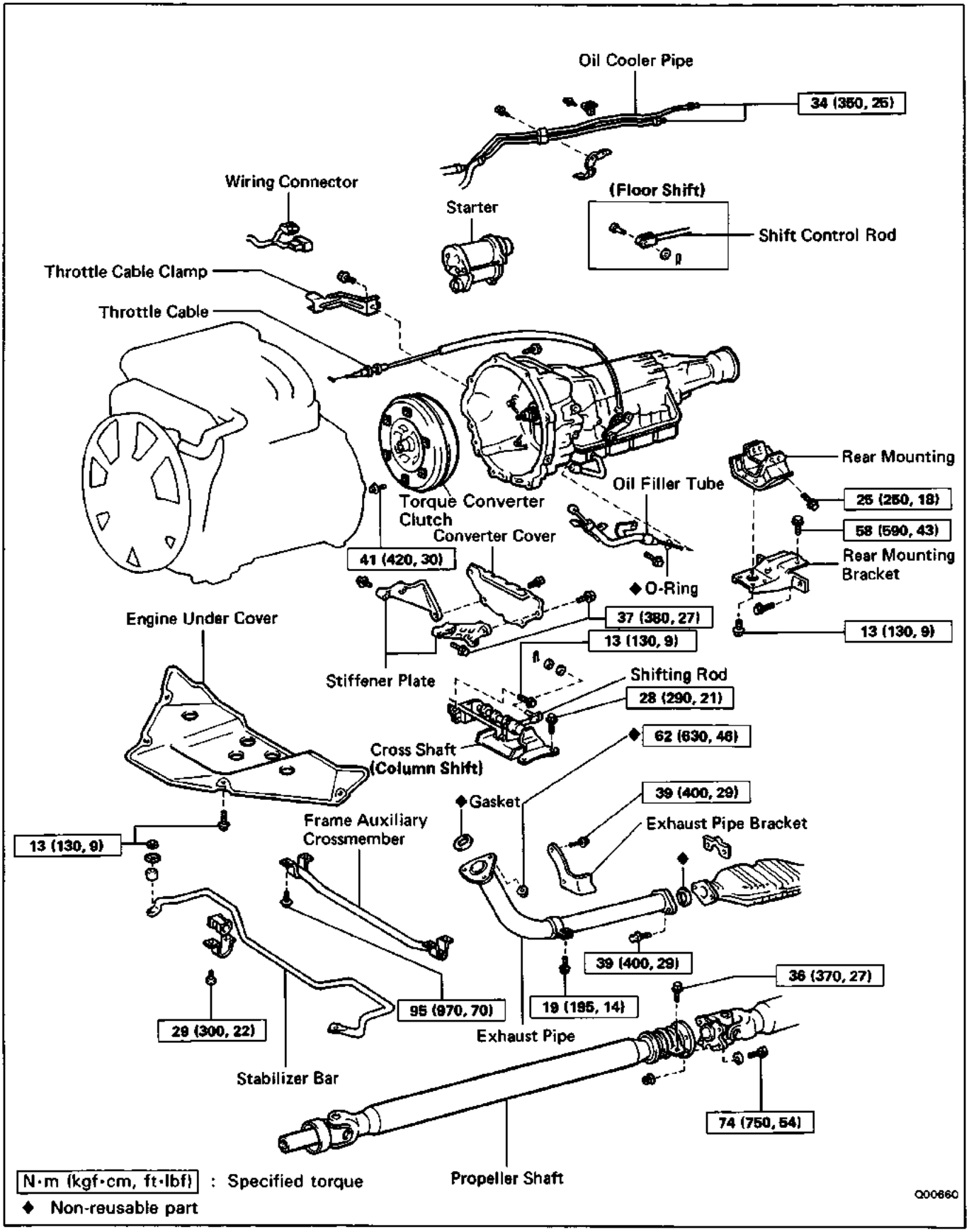

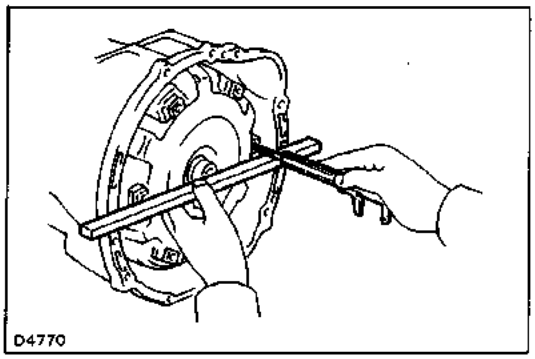

(MAIN POINT OF INSTALLATION)

1. CHECK TORQUE CONVERTER CLUTCH INSTALLATION

Using calipers and a straight edge, measure from the installed surface of the torque converter clutch to the front surface of the transmission housing.

Correct distance: 18.0 mm (0.709 in.)

If the distance is less than the standard, check for an improper installation.

2. ADJUST TRANSMISSION THROTTLE CABLE
(See page AT–60)

3. FILL TRANSMISSION WITH ATF AND CHECK FLUID LEVEL

Fluid type: ATF DEXRON® II

NOTICE: Do not overfill.

TORQUE CONVERTER CLUTCH AND DRIVE PLATE

INSPECTION OF TORQUE CONVERTER CLUTCH AND DRIVE PLATE

1. INSPECT ONE–WAY CLUTCH

(a) Install SST into the inner race of the one–way clutch.
SST 09350–30020 (09351–32010)

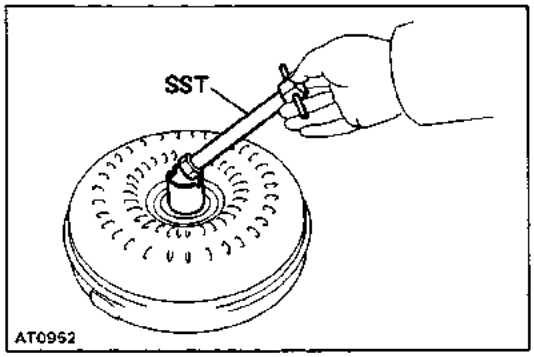

(b) Install SST so that it fits in the notch of the con–verter hub and outer race of the one–way clutch.
SST 09350–30020 (09351–32020)

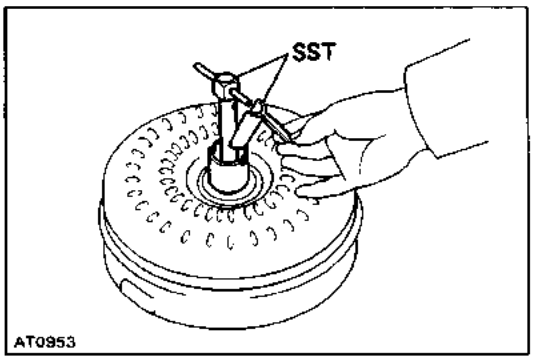

(c) With the torque converter clutch standing on its side, the clutch locks when turned counterclockwise, and rotates freely and smoothly clockwise.
If necessary, clean the converter and retest the clutch.
Replace the converter if the clutch still fails the test.

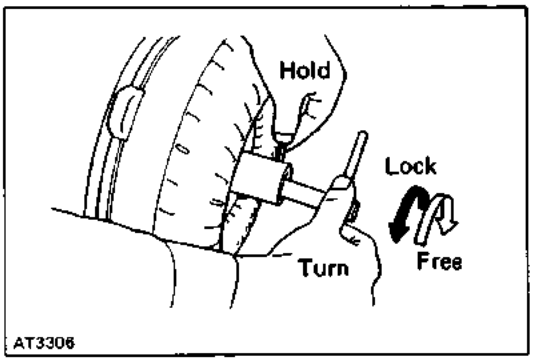

2. MEASURE DRIVE PLATE RUNOUT AND INSPECT RING GEAR

Set up a dial indicator and measure the drive plate runout.
If runout exceeds 0.20 mm (0.0079 in.) or if the ring gear is damaged, replace the drive plate. If installing a new drive plate, note the orientation of spacers and tighten the bolts.
Torque: 83 N–m (850 kgf–cm, 61 ft–lbf)

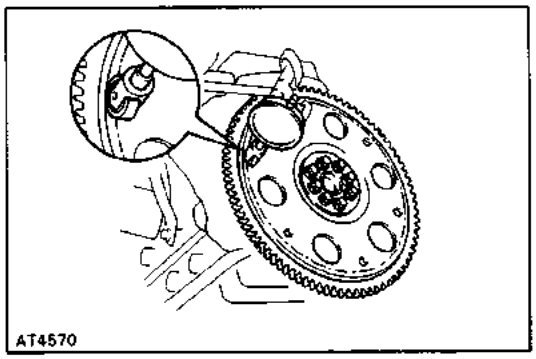

3. MEASURE TORQUE CONVERTER CLUTCH SLEEVE RUNOUT

(a) Temporarily mount the torque converter clutch to the drive plate. Set up a dial indicator.
If runout exceeds 0.30 mm (0.0118 in.), try to correct by reorienting the installation of the converter. If excessive runout cannot be corrected, replace the torque converter clutch.
HINT: Mark the position of the converter to ensure cor rect installation.
(b) Remove the torque converter clutch.

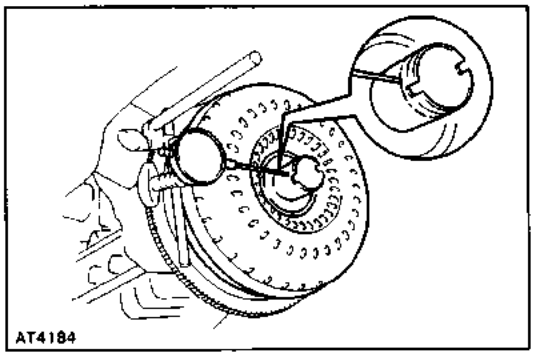

A340H Automatic Transmission

DESCRIPTION

General

The A340H automatic transmission is a four–speed, Electronic Controlled Transmission with electronically controlled 4WD transfer, developed with the aim of producing an easy–driving 4WD vehicle.
The transfer section consists of planetary gears, hydraulic clutches and hydraulic brake. The operation of these is fully controlled by the ECM.
The A340H transmission is mainly composed of the torque converter clutch, the overdrive (hereafter called O/D) planetary gear unit, 3–speed planetary gear unit, 2–speed transfer, the hydraulic control system and the electronic control system.

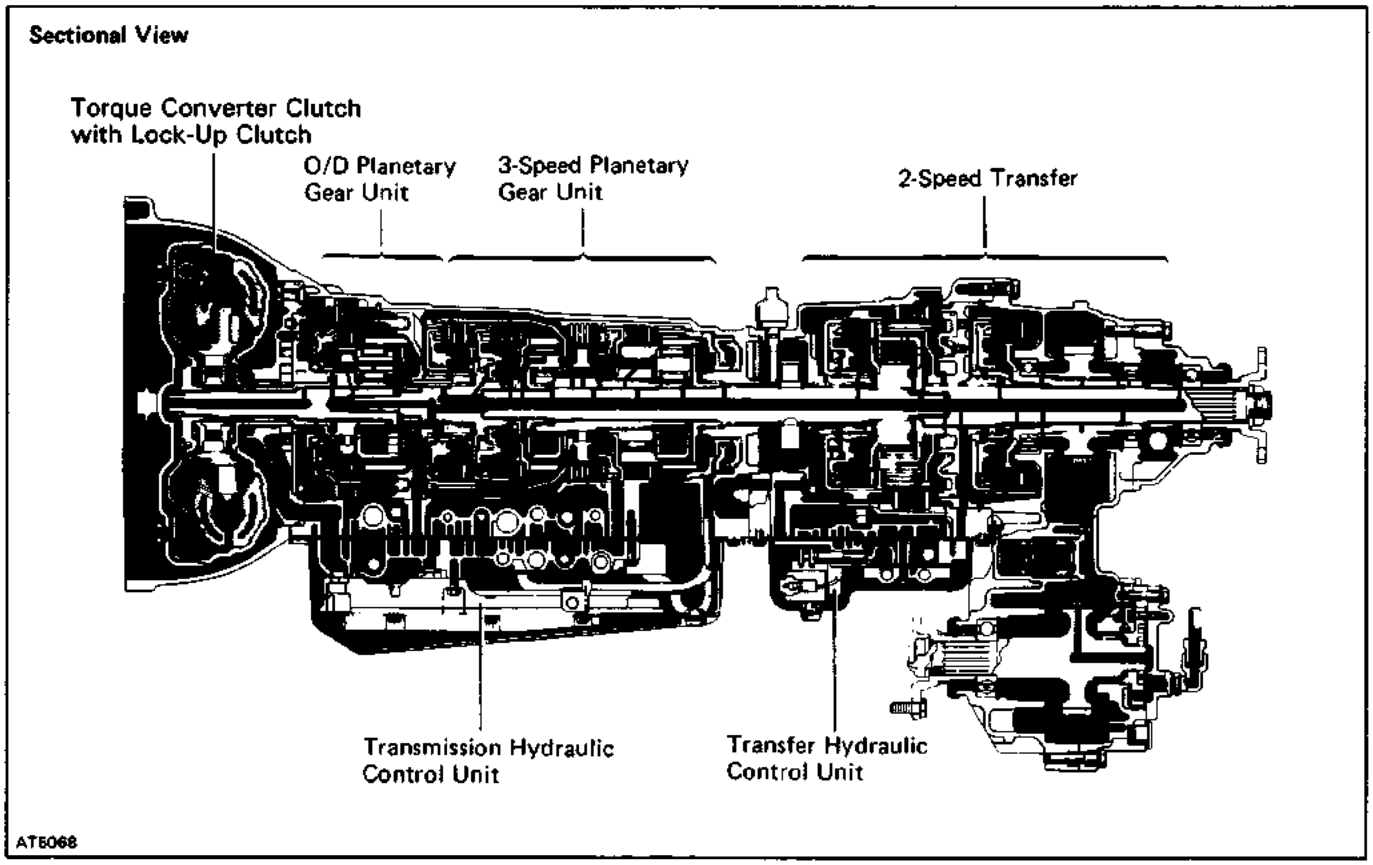

General Specifications

Type of Transmission				A340H
Type of Engine				3VZ-E
Torque Converter Clutch		Stall Torque Ratio		2.1 : 1
		Lock–Up Mechanism		Equipped
Gear Ratio	Transmission	1 st Gear		2.804
		2nd Gear		1.531
		3rd Gear		1.000
		O/D Gear		0.705
		Reverse Gear		2.393
	Transfer	High (H2, H4)		1.000
		Low (L4)		2.659
Number of Discs and Plates (Disc /Plate)	Transmission	C_1	Forward Clutch	5/5
		C_2	Direct Clutch	4/4
		C_0	O/D Direct Clutch	2/2
		B_2	2nd Brake	5/5
		B_3	1 st & Reverse Brake	6/6
		B_0	O/D Brake	4/3
	Transfer	C_3	Transfer Direct Clutch	6/6
		C_4	Front Drive Clutch	6/6
		B_4	Low Speed Brake	7/6
ATF		Type		ATF DEXRON® II
		Capacity liter (US qts, Imp. qts)	Total	Transmission: 10.3 (10.9, 9.1), Transfer: 1.1 (1.2, 1.0)
			Drain & Refill	Transmission: 4.5 (4.8, 4.0), Transfer: 0.8 (0.8, 0.7)

OPERATION

Mechanical Operation

OPERATING CONDITIONS

1. Transmission

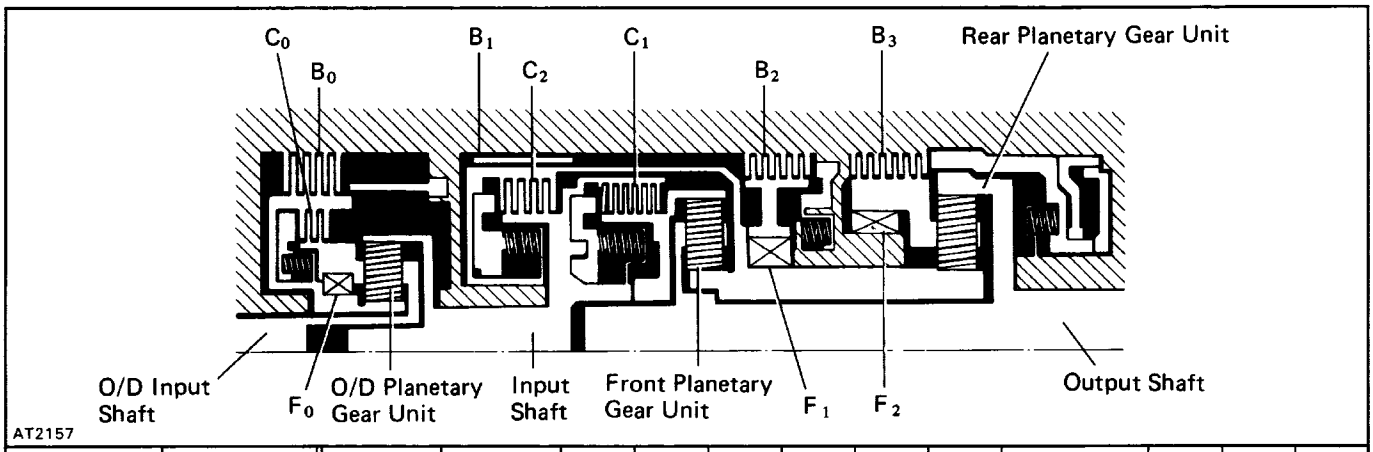

Shift Lever Position	Gear	No. 1 Solenoid Valve	No. 2 Solenoid Valve	C_0	C_1	C_2	B_0	B_1	B_2	B_3 I.P.	B_3 O.P.	F_0	F_1	F_2
P	Parking	ON	OFF	●										
R	Reverse	ON	OFF	●		●				●	●	●		
N	Neutral	ON	OFF	●										
D	1st	ON	OFF	●	●							●		●
	2nd	ON	ON	●	●				●			●	●	
	3rd	OFF	ON	●	●	●			●			●		
	O/D	OFF	OFF		●	●	●		●					
2	1st	ON	OFF	●	●							●		●
	2nd	ON	ON	●	●			●	●			●	●	
	3rd	OFF	ON	●	●	●			●			●		
L	1st	ON	OFF	●	●					●	●	●		●
	* 2nd	ON	ON	●	●			●	●			●	●	

* Down–shift only in the L position and 2nd gear–no up–shift.

I.P. ..... Inner Piston
O.P. ..... Outer Piston

2. Transfer

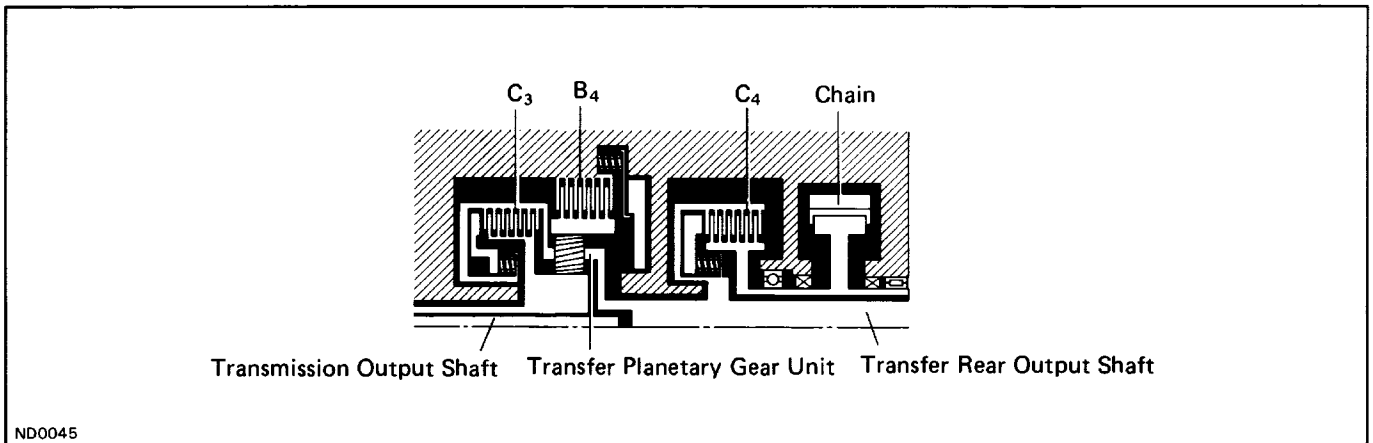

Transfer gear position	No.4 solenoid valve	C_3	C_4	B_4
H2	OFF	●		
H4	OFF	●	●	
L4	ON		●	●

FUNCTION OF COMPONENTS

1. Transmission

Component		Function
C_1	Forward Clutch	Connects input shaft and front planetary ring gear.
C_2	Direct Clutch	Connects input shaft and front & rear planetary sun gear.
C_O	O/D Direct Clutch	Connects overdrive sun gear and overdrive planetary carrier.
B_1	2nd Coast Brake	Prevents front & rear planetary sun gear from turning either clockwise or counterclockwise.
B_2	2nd Brake	Prevents outer race of F, from turning either clockwise or counterclockwise thus preventing the front & rear planetary sun gear from turning counterclock–wise.
B_3	1 st & Reverse Brake	Prevents rear planetary carrier from turning either clockwise or counterclock–wise.
B_O	O/D Brake	Prevents overdrive sun gear from turning either clockwise or counterclock–wise.
F_1	No. 1 One–Way Clutch	When B_2 is operating, this clutch prevents the front & rear planetary sun gear from turning counterclockwise.
F_2	No.2 One–Way Clutch	Prevents rear planetary carrier from turning counterclockwise.
F_O	O/D One–Way Clutch	When the transmission is being driven by the engine, this clutch connects the overdrive sun gear and overdrive planetary carrier.
Planetary Gears		These gears change the route through which driving force is transmitted in accordance with the operation of each clutch and brake in order to increase or reduce the input and output speed.

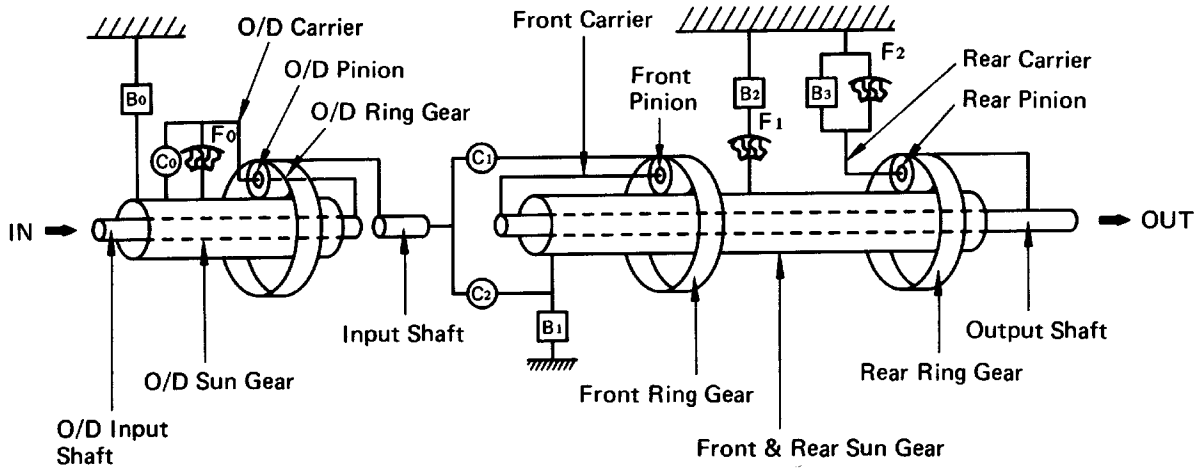

AT5440

FUNCTION OF COMPONENTS (Cont'd)

The conditions of operation for each gear position are shown in the following illustrations:

D or 2 Position 1st Gear

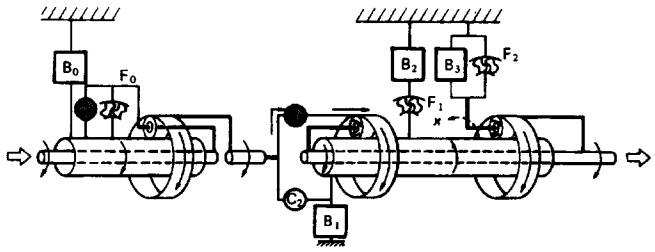

AT5854

2 or L Position 2nd Gear

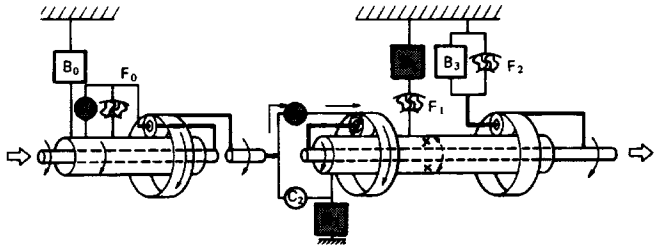

AT5854

D Position 2nd Gear

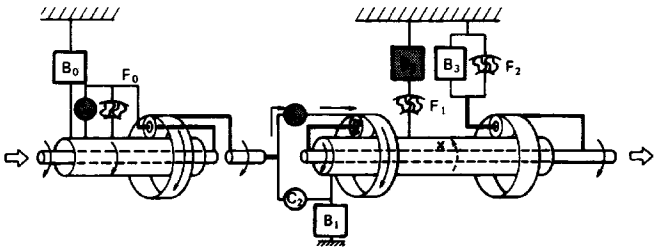

AT5854

L Position 1st Gear

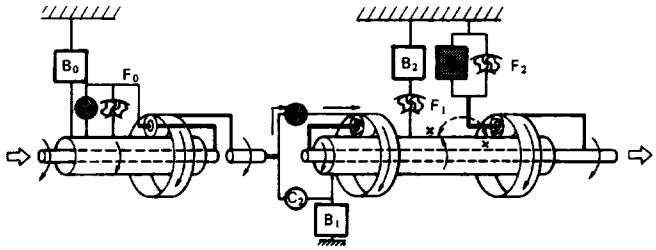

AT5854

D or 2 Position 3rd Gear

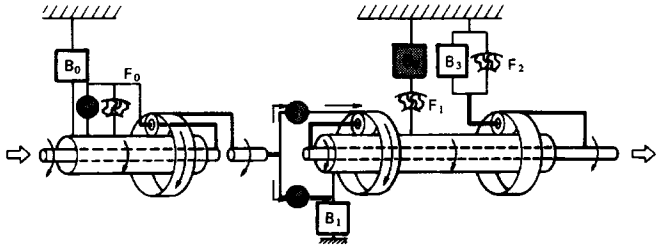

AT5854

R Position Reverse Gear

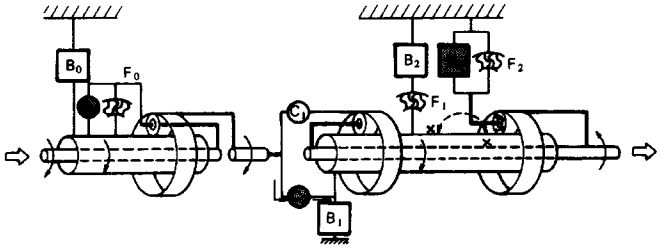

AT5854

D Position O/D

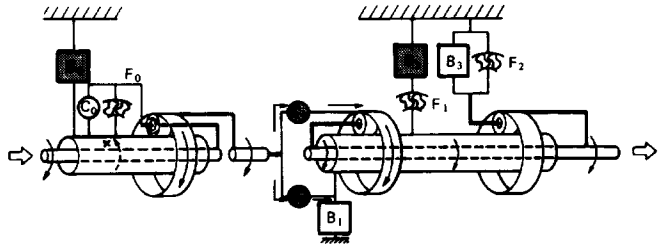

AT5854

FUNCTION OF COMPONENTS (Cont'd)

2. Transfer

Component		Function
C_3	Forward Clutch	Connects transmission output shaft and transfer pinion gear.
C_4	Direct Clutch	Connects transfer rear output shaft and front drive gear.
B_4	O/D Direct Clutch	Prevents transfer ring gear from turning either clockwise or counterclockwise.

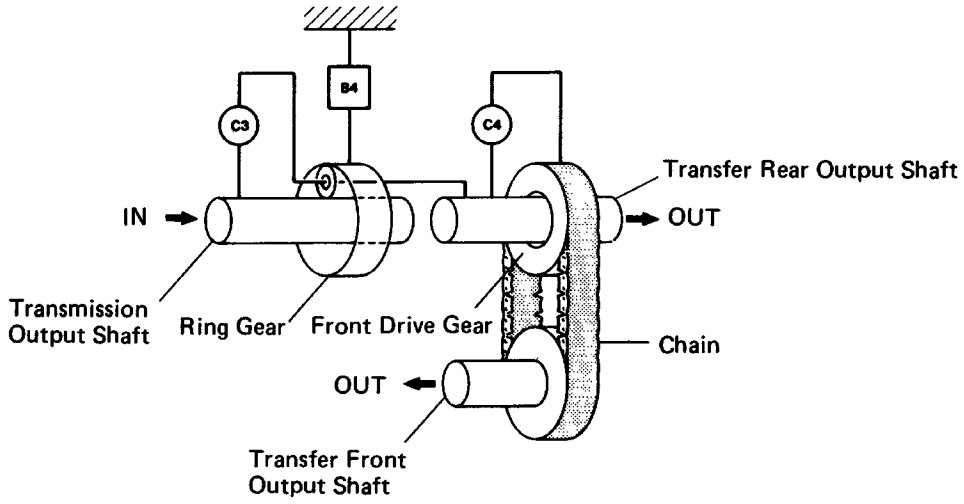

ND0047

The conditions of operation for each gear position are shown in the following illustrations:

H2 Position

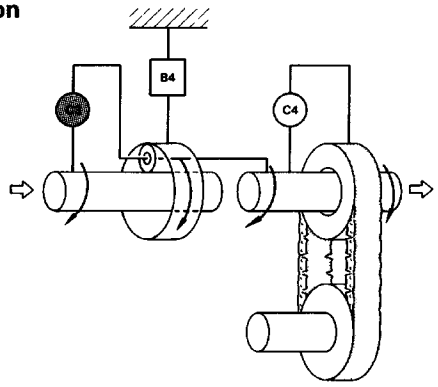

ND0047

H4 Position

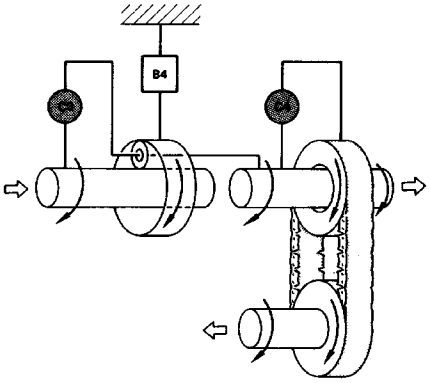

ND0047

L4 Position

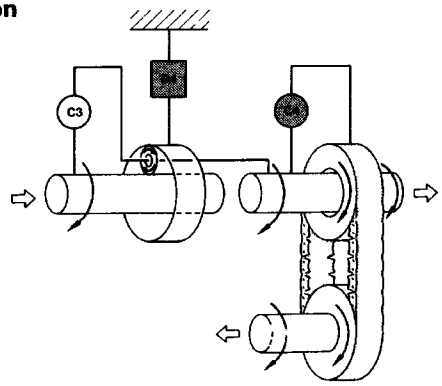

ND00047

Hydraulic Control System

1. Transmission

The hydraulic control system is composed of the oil pump, the valve body, the solenoid valves, and the clut–ches and brakes, as well as the fluid passages which connect all of these components. Based on the hydraulic pressure created by the oil pump, the hydraulic control system governs the hydraulic pressure ac–ting on the torque converter clutch, clutches and brakes in accordance with the vehicle driving conditions. There are three solenoid valves on the valve body. These solenoid valves are turned on and off by signals from the ECM to operate the shift valves. These shift valves then switch the fluid passages so that fluid goes to the torque converter clutch and planetary gear units.

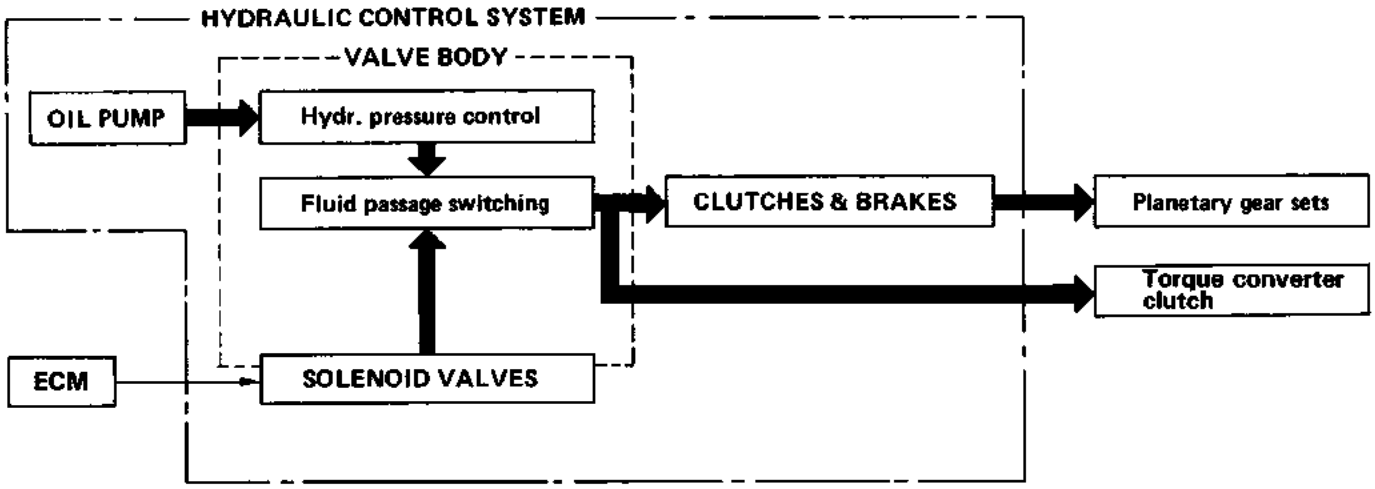

2 Transfer

The hydraulic control system consists of a valve body, No.4 solenoid valve, a brake (B_4) and two clutches (C3, C4) and passages that connect these elements. It hydraulically controls the planetary gear unit either manually, or automatically by the ECM.

Electronic Control System

The electronic control system, which controls the transmission and transfer shift timing and the operation of the lock–up clutch, is composed of the following three parts:

1. Sensors

These sensors sense the vehicle speed, throttle opening and other conditions and send these data to the ECM in the form of electrical signals.

2. ECM

The ECM determines the transmission and transfer shift timing and lock–up timing based upon the signals from sensors, and controls the solenoid valves of the hydraulic control unit accordingly.

3. Actuators

These are four solenoid valves that control hydraulic pressure acting on the hydraulic valves to control shifting and lock–up timing.

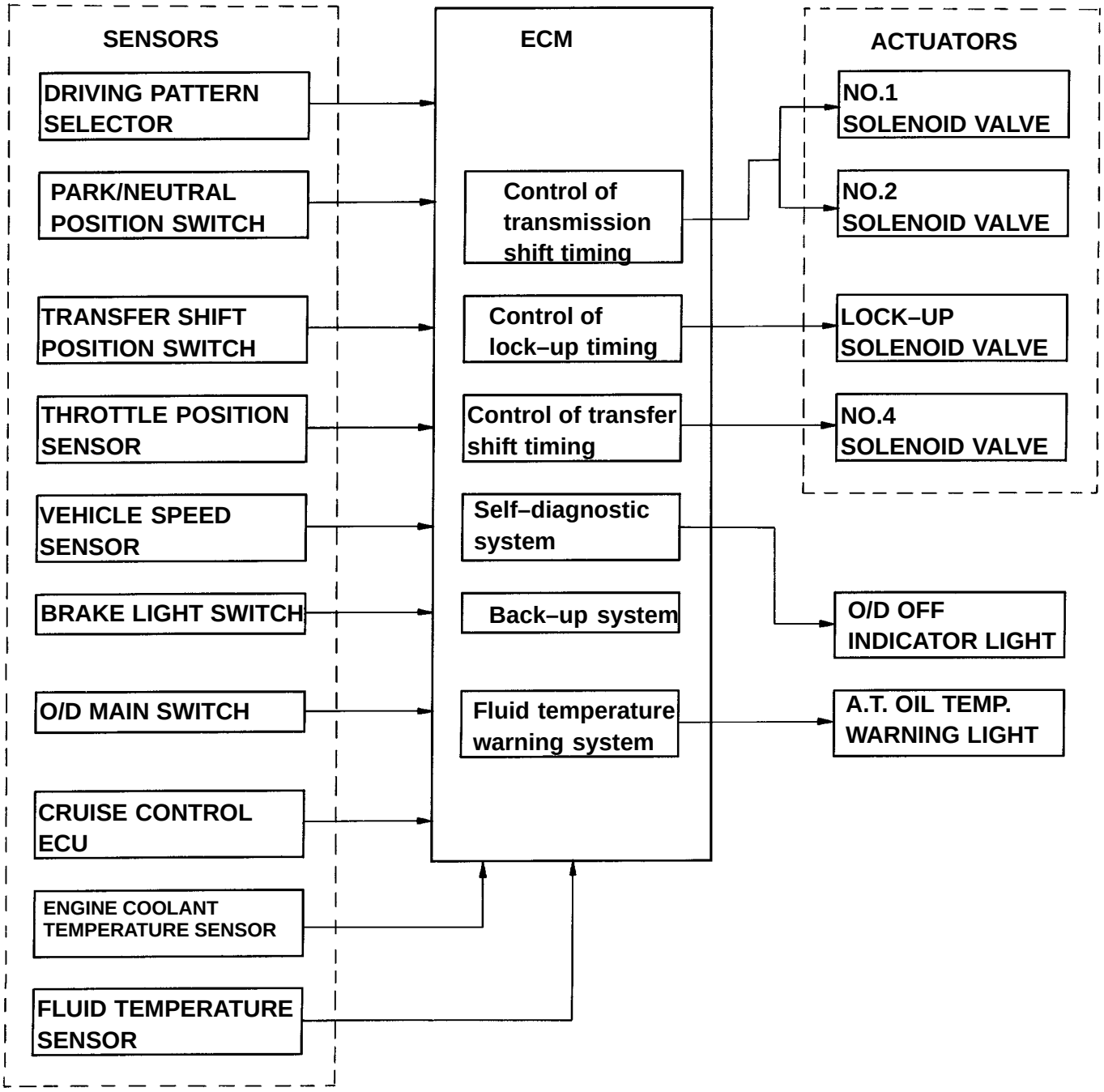

TROUBLESHOOTING

Basic Troubleshooting

Before troubleshooting an electronic controlled transmission first determine whether the problem is electrical or mechanical. To do this, just refer to the basic troubleshooting flow–chart provide below.
If the cause is already known, using the basic troubleshooting chart below along with the general troubleshooting chart on the following pages should speed the procedure.

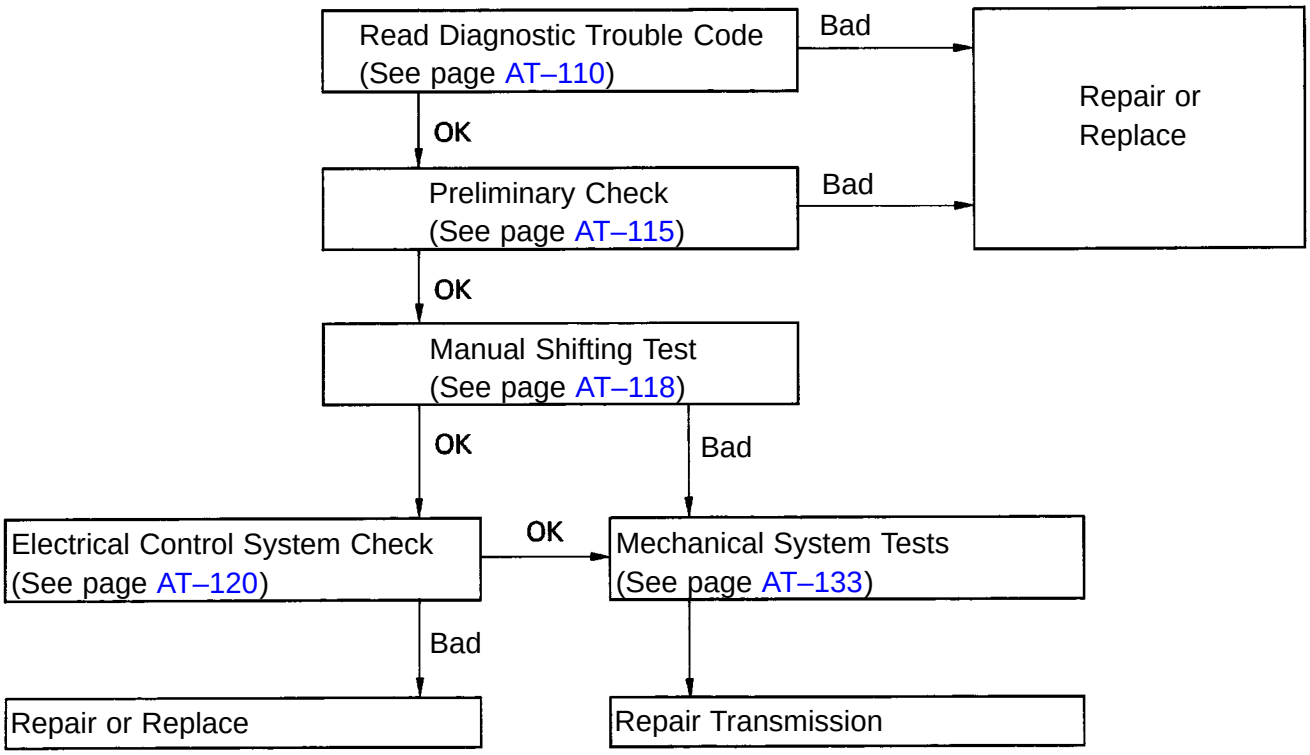

General Troubleshooting

Problem	Possible cause	Remedy	Page
Fluid discolored or smells burnt	Fluid contaminated Torque converter clutch faulty Transmission faulty	Replace fluid Replace torque converter clutch Disassemble and inspect transmission	AT–115 AT–162 ★
Vehicle does not move in any forward position or reverse	Manual linkage out of adjustment Valve body or primary regulator faulty Parking lock pawl faulty Torque converter clutch faulty Converter drive plate broken Oil pump intake screen blocked Transmission faulty	Adjust linkage Inspect valve body Inspect parking lock pawl Replace torque converter clutch Replace drive plate Clean screen Disassemble and inspect transmission	AT–116 ★ AT–158 AT–162 AT–162 ★ ★
Shift lever position incorrect	Manual linkage out of adjustment Manual valve and lever faulty Transmission faulty	Adjust linkage Inspect valve body Disassemble and inspect transmission	AT–116 ★ ★
Harsh engagement into any drive position	Throttle cable out of adjustment Valve body or primary regulator faulty Accumulator pistons faulty Transmission faulty	Adjust throttle cable Inspect valve body Inspect accumulator pistons Disassemble and inspect transmission	AT–116 ★ ★ ★
Delayed 1–2, 2–3 or 3–0/1) up–shift, or down–shifts from O/D–3 or 3–2 and shifts back to O/D or 3	Electronic control faulty Valve body faulty Solenoid valve faulty	Inspect electronic control Inspect valve body Inspect solenoid valve	AT–120 ★ ★
Slips on 1–2, 2–3 or 3–0/D up–shift, or slips or shudders on acceleration	Manual linkage out of adjustment Throttle cable out of adjustment Valve body faulty Solenoid valve faulty Transmission faulty	Adjust linkage Adjust throttle cable Inspect valve body Inspect solenoid valve Disassemble and inspect transmission	AT–116 AT–116 ★ ★ ★
Drag, binding or tie–up on 1–2, 2–3 or 3–OID up–shift	Manual linkage out of adjustment Valve body faulty Transmission faulty	Adjust linkage Inspect valve body Disassemble and inspect transmission	AT–116 ★ ★

Remark *: Refer to A340H Automatic Transmission Repair Manual. (Pub. No. RM271U)

General Troubleshooting (Cont'd)

Problem	Possible cause	Remedy	Page
No lock–up in 2nd, 3rd or O/D	Electronic control faulty Valve body faulty Solenoid valve faulty Transmission faulty	Inspect electronic control Inspect valve body Inspect solenoid valve Disassemble and inspect transmission	AT–120 ★ ★ ★
Harsh down–shift	Throttle cable out of adjustment Throttle cable and cam faulty Accumulator pistons faulty Valve body faulty Transmission faulty	Adjust throttle cable Inspect throttle cable and cam Inspect accumulator pistons Inspect valve body Disassemble and inspect transmission	AT–116 AT–116 ★ ★ ★
No down–shift when coasting	Valve body faulty Solenoid valve faulty Electronic control faulty	Inspect valve body Inspect solenoid valve Inspect electronic control	★ : ★ AT–120
Down–shift occurs too quickly or too late while coasting	Throttle cable faulty Valve body faulty Transmission faulty Solenoid valve faulty Electronic control faulty	Inspect throttle cable Inspect valve body Disassemble and inspect transmission Inspect solenoid valve Inspect electronic control	AT–116 ★ ★ ★ AT–120
No O/D–3, 3–2 or 2–1 kick–down	Solenoid valve faulty Electronic control faulty Valve body faulty	Inspect solenoid valve Inspect electronic control Inspect valve body	★ AT–120 ★
No engine braking in 2 or L position	Solenoid valve faulty Electronic control faulty Valve body faulty Transmission faulty	Inspect solenoid valve Inspect electronic control Inspect valve body Disassemble and inspect transmission	★ AT–120 ★ ★
Vehicle does not hold in P	Manual linkage out of adjustment Parking lock pawl cam and spring faulty	Adjust linkage Inspect cam and spring	AT–116 AT–158
No H2–H4, H4–L4, L4–H4 or H4–H2 change gear position of transfer	Transfer linkage out of adjustment Electronic control faulty Transfer valve body faulty Transfer faulty	Adjust linkage Inspect electronic control Inspect valve body Disassemble and inspect transfer	AT–116 AT–120 ★ ★

Remark *: Refer to A340H Automatic Transmission Repair Manual. (Pub. No. RM271 U)

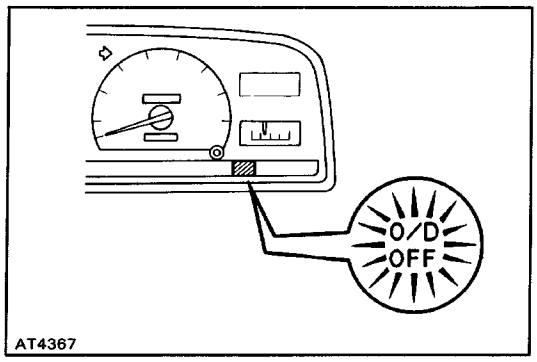

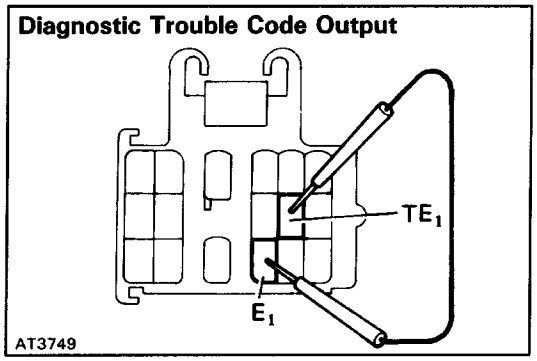

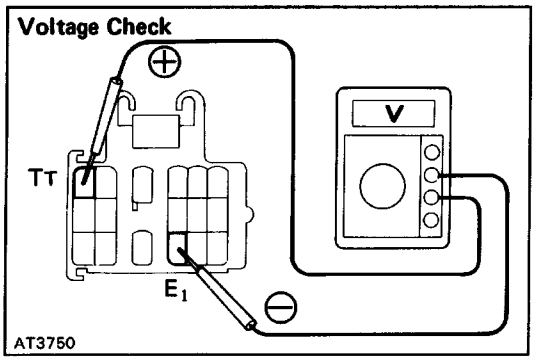

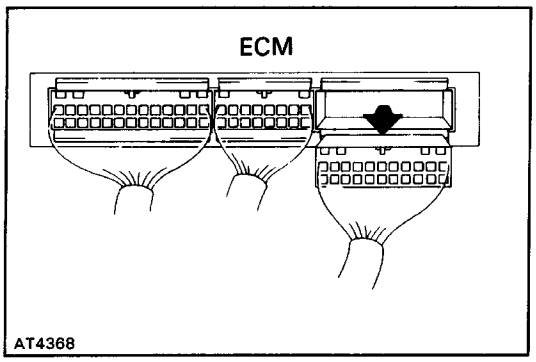

Diagnosis System

DESCRIPTION

1. A self–diagnosis function is built into the electrical control system. Warning is indicated by the overdrive OFF indicator light.

   HINT: Warning and diagnostic trouble codes can be read only when the overdrive switch is ON. If OFF, the overdrive OFF light is lit continuously and will not blink.

   (a) If a malfunction occurs within the vehicle speed sensors (No. 1 or 2) or solenoids (No. 1, 2, or 4), the overdrive OFF light will blink to warn the driver. However, there will be no warning of a malfunction with lock–up solenoid.

   (b) The diagnostic trouble code can be read by the number of blinks of the overdrive OFF indicator light when terminals TE, and El are connected. (See page AT–111)

   (c) The throttle position sensor or brake signal are not indicated, but inspection can be made by checking the voltage at terminal TT of the data link connector 1.

   (d) The signals to each gear can be checked by measuring the voltage at terminal TT while driving.

2. The diagnostic trouble code is retained memory by the ECM and due to back–up voltage, is not canceled out when the engine is turned off. Consequently, after repair, it is necessary to turn the ignition switch off and remove the MFI fuse (1 5A) or disconnect the ECM connector to cancel out the diagnostic trouble code. (See page AT–119)

   HINT:

   Low battery positive voltage will cause faulty operation of the diagnosis system. Therefore, always check the battery first.

   Use a voltmeter and ohmmeter that have an impedance of at least 10 kΩ/v.

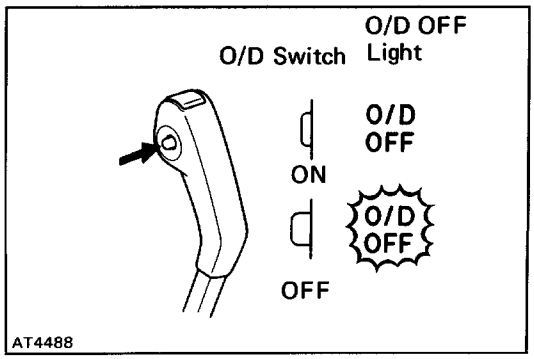

CHECK ”O/D OFF” INDICATOR LIGHT

1. Turn the ignition switch ON.
2. The ”O/D OFF” light will come on when the O/D switch is placed at OFF.
3. When the O/D switch is set to ON, the–O/D OFF” light should go out.

If the ”’O/D OFF” light flashes when the O/D switch is set to ON, the electronic control system is faulty.

READ DIAGNOSTIC TROUBLE CODE

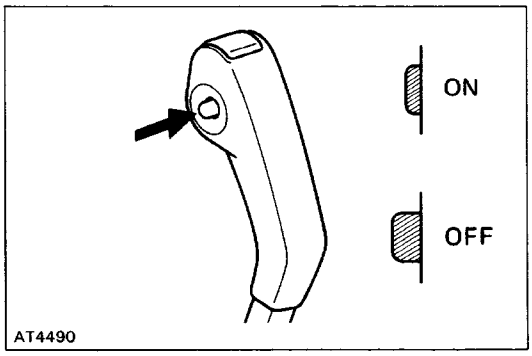

1. TURN IGNITION SWITCH AND O/D SWITCH TO ON

Do not strat the engine.

HINT: Warning and diagnostic trouble codes can be read only when the overdrive switch is ON. If OFF, the overdrive OFF light will light continuously and will not blink.

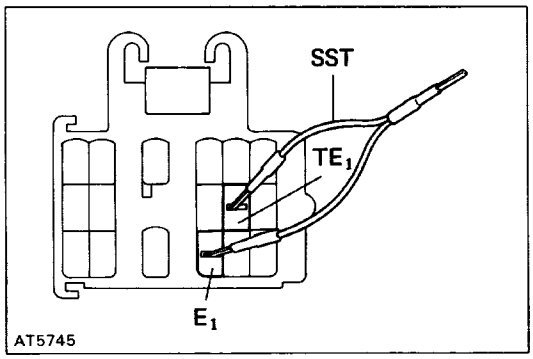

2. CONNECT TE, AND E, TERMINALS OF DATA LINK CONNECTOR 1

Using SST, connect terminals TE, and.El.

SST 09843–18020

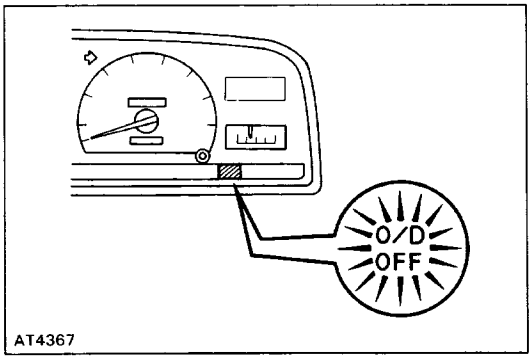

3. READ DIAGNOSTIC TROUBLE CODE

Read the diagnostic trouble code as indicated by the number of times the O/D OFF light flashes.

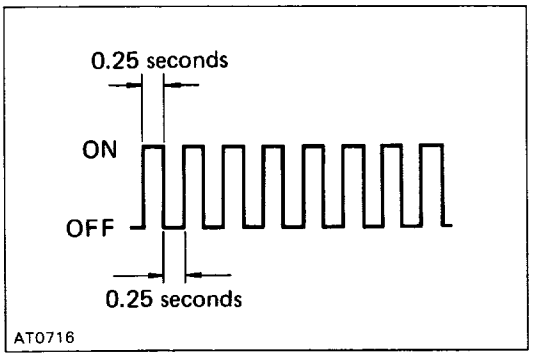

(Diagnostic Trouble Code Indication)

- If the system is operating normally, the light will flash 2 times per second.

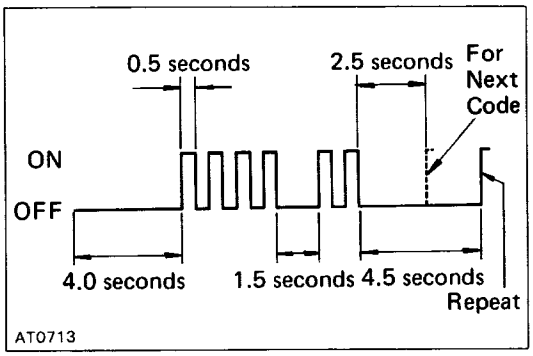

- In the event of a malfunction, the light will flash 1 time per second. The number of blinks will equal the first number and, after 1.5 seconds pause, the second number of the two digit diagnostic trouble code. If there are two or more codes, there will be a 2.5 seconds pause between each.

HINT: In the event of several trouble codes occuring si–multaneously, indication will begin from the smaller value and continue to the larger.

4. REMOVE SST

DIAGNOSTIC TROUBLE CODES

Code No.	Light Pattern	Diagnosis System
–		Normal
42		Defective No. 1 vehicle speed sensor (in ATM)– severed wire harness or short circuit
61		Defective No.2 vehicle speed sensor (in ATM)– severed wire harness or short circuit
62		Severed No. 1 solenoid or short circuit– severed wire harness or short circuit
63		Severed No.2 solenoid or short circuit– severed wire harness or short circuit
64		Severed lock–up solenoid or short circuit– severed wire harness or short circuit
65		Severed No.4 solenoid or short circuit– severed wire harness or short circuit

HINT: If codes 62, 63, 64 or 65 appear, there is an electrical malfunction in the solenoid.
Causes due to mechanical failure, such as a stuck valve, will not appear.

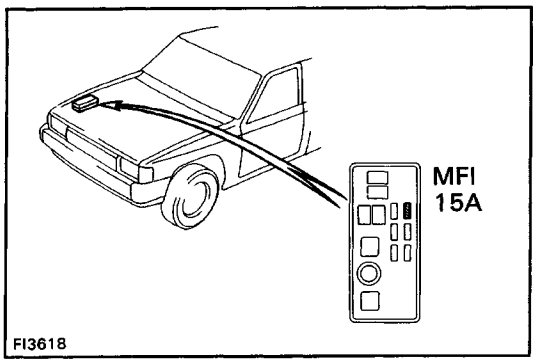

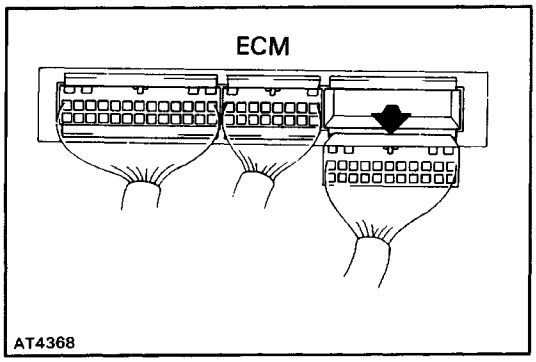

CANCEL OUT DIAGNOSTIC TROUBLE CODE

1. After repair of the trouble area, the diagnostic trouble code retained in memory by the ECM must be canceled by removing the MFI fuse (1 5A) for 10 seconds or more, depending on ambient temperature (the lower the temperature, the longer the fuse must be left out) with the ignition switch OFF.

HINT:
- Cancellation can be also done by removing the battery negative (–) terminal, but in this case other memory systems will be also canceled out.
- The diagnostic trouble code can be also canceled out by disconnecting the ECM connector.
- If the diagnostic trouble code is not canceled out, it will be retained by the ECM and appear along with a new code in event of future trouble.

2. After cancellation, perform a road test to confirm that a ”normal code” is now read on the O/D OFF light.

TROUBLESHOOTING FLOW–CHART

HINT:

- If diagnostic trouble code Nos. 42, 61, 62, 63 or 65 are output, the overdrive OFF indicator light will begin to blink immediately to warn the driver. However, an impact or shock may cause the blinking to stop; but the code will still be retained in the ECM memory unit canceled out.
- There is no warning for diagnostic trouble code No. 64.
- In the event of a simultaneous malfunction of both No. 1 and No. 2 vehicle speed sensors, no diagnostic trouble code will appear and the fail–safe system will not function. However, when driving in the D position, the transmission will not up–shift from first gear, regardless of the vehicle speed.
  Diagnostic trouble code 42 (No. 1 vehicle speed sensor circuitry)

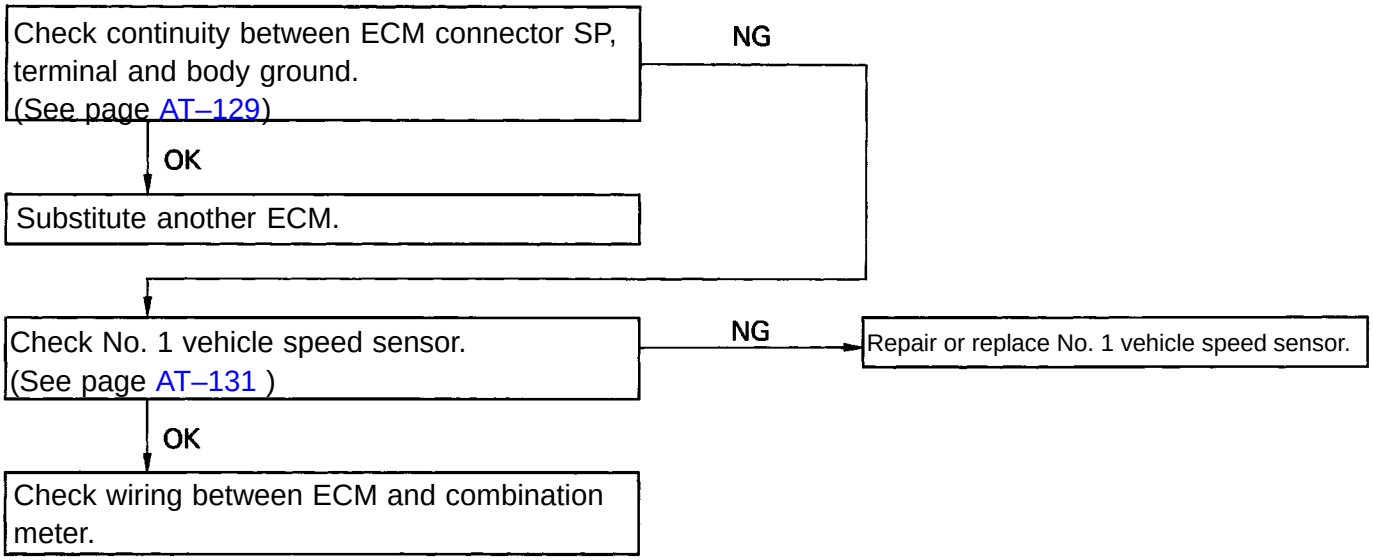

Diagnostic trouble code 61 (No.2 vehicle speed sensor circuitry)

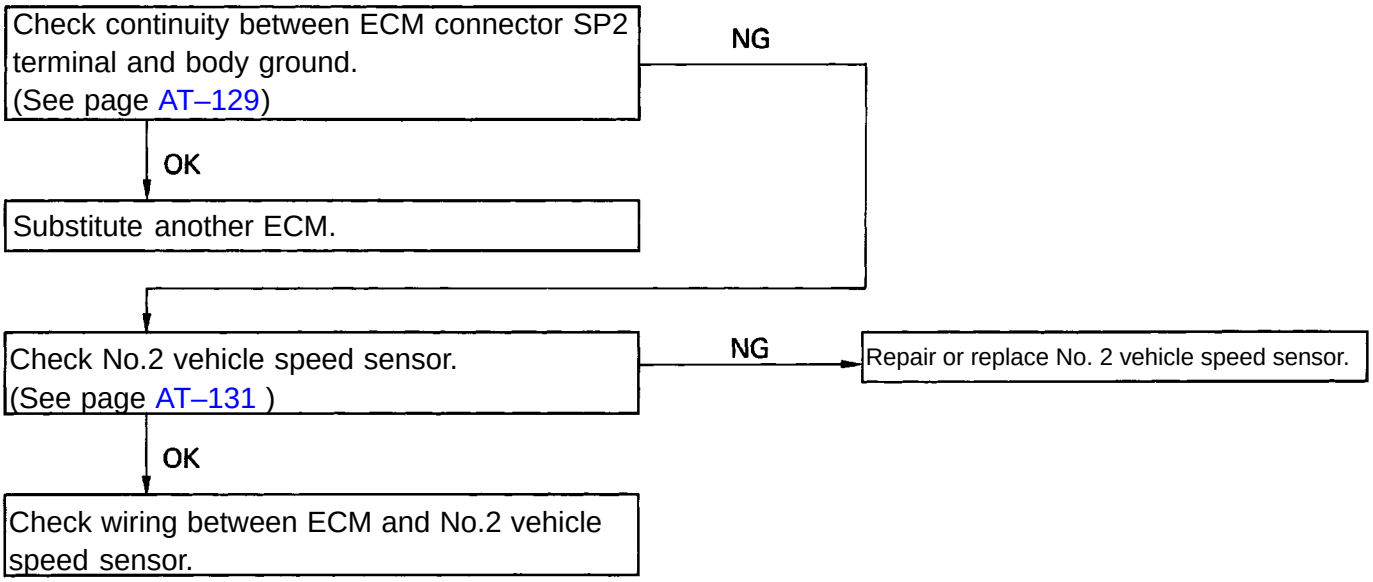

Diagnostic trouble code 62 (No. 1 solenoid valve circuitry)

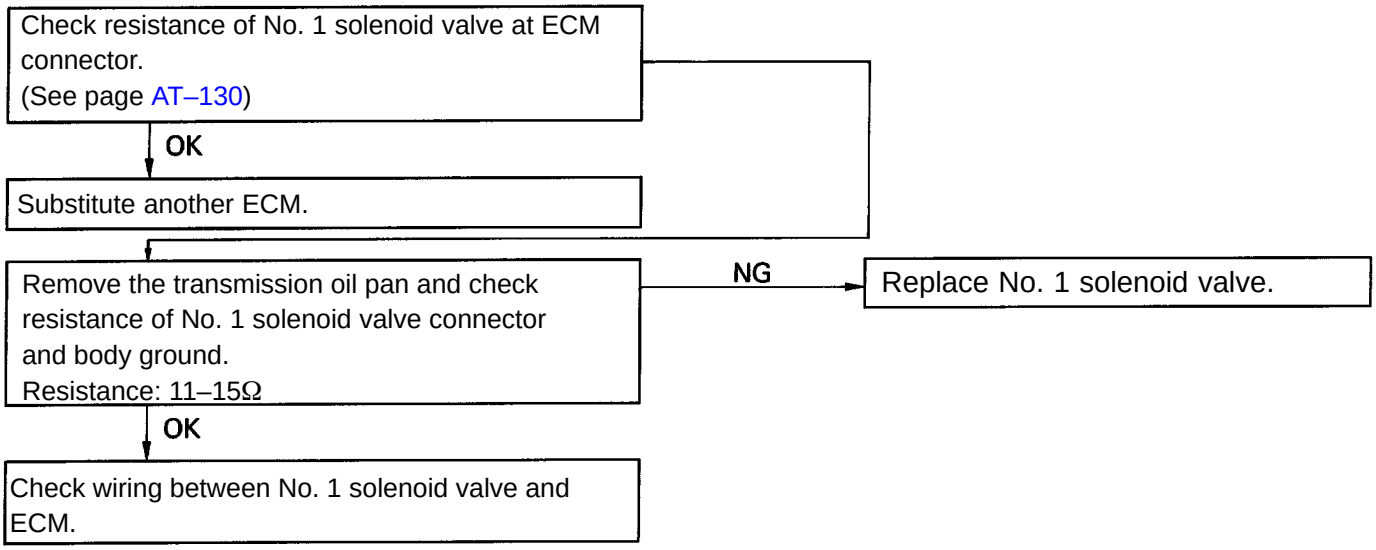

Diagnostic trouble code 63 (No.2 solenoid valve circuitry)

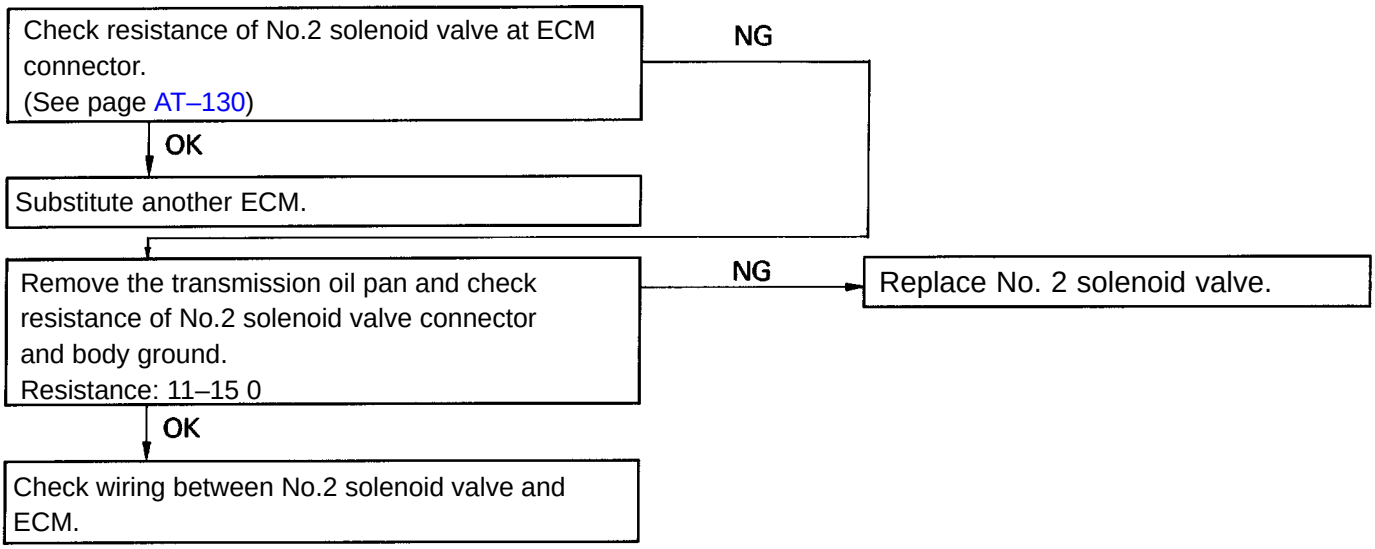

Diagnostic trouble code 64 (Lock–up solenoid valve circuitry)

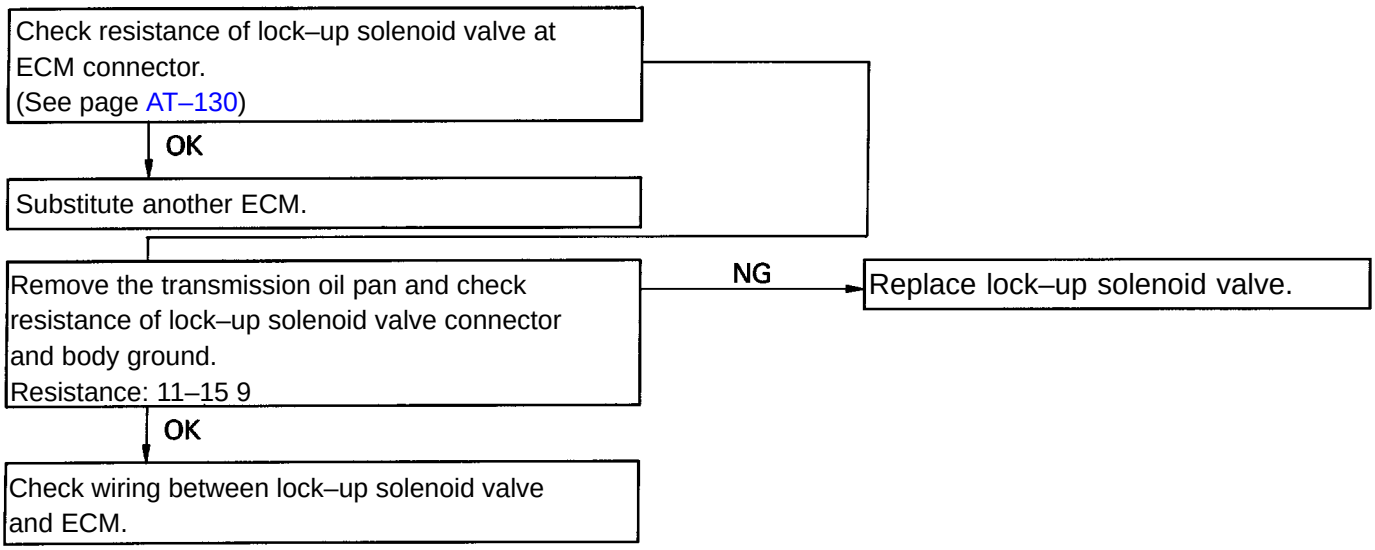

Diagnostic trouble code 65 (No.4 solenoid valve circuitry)

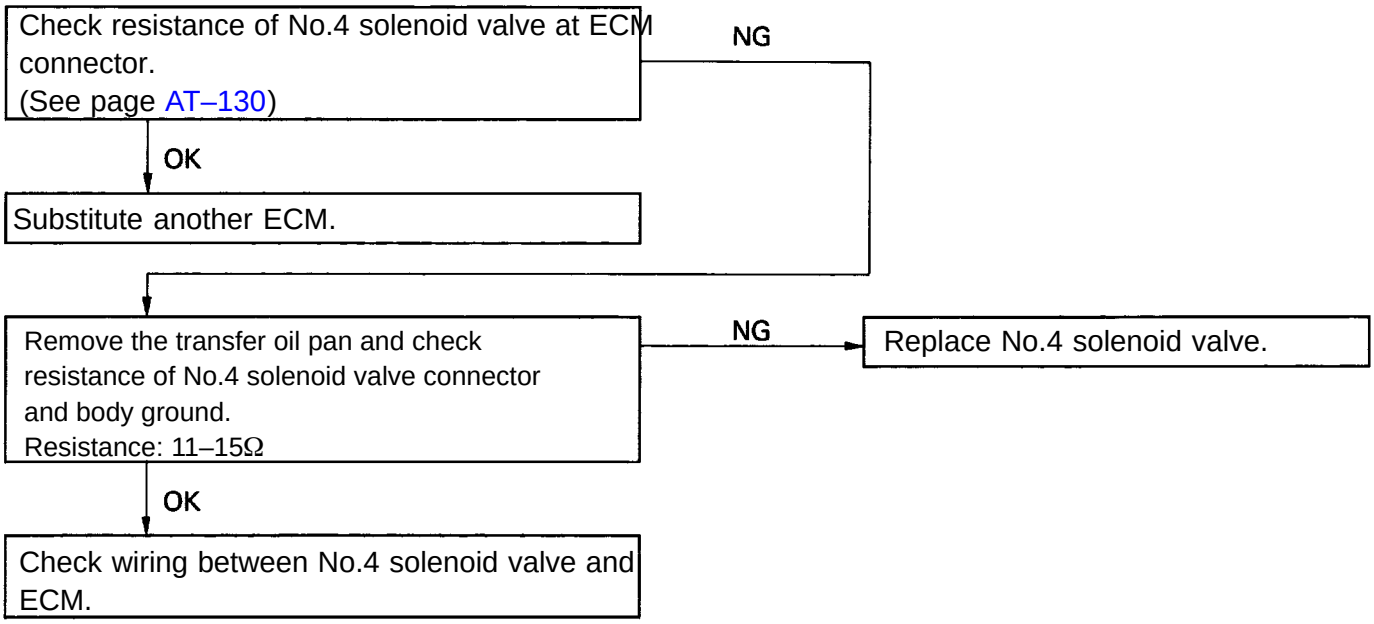

Preliminary Check

1. CHECK FLUID LEVEL

(Transmission and transfer case)

HINT:

- The vehicle must have been driven so that the engine and transmission are at normal operating temperature. (Fluid temperature: 70–80°C or 158–176°F)
- Only use the COOL range on the dipstick as a rough re–ference when the fluid is replaced or the engine does not run.

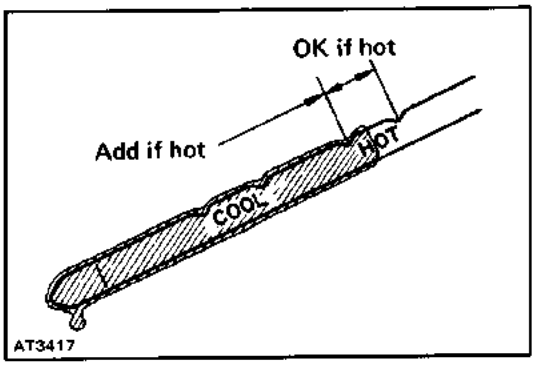

(a) Park the vehicle on a level surface, set the parking brake.

(b) With the engine idling, shift the shift lever into all positions from P to L position and return to P posi–tion.

(c) Pull out the transmission dipstick and wipe it clean.

(d) Push it back fully into the tube.

(e) Pull it out and check that the fluid level is in the HOT range.

If the level is at the low side, add fluid.

Fluid type: ATF DEXRON® II

NOTICE: Do not overfill.

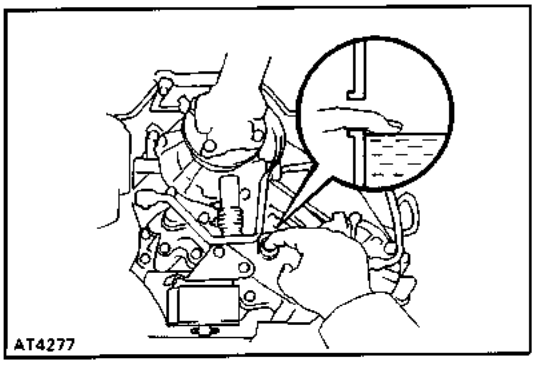

(Transfer chain case)

Remove the filler plug and feel inside the hole with your finger. Check that the oil comes to within 10 mm (0.39 in.) of the bottom edge of the hole.

If the level is low, add fluid until it begins to run out of the filler hole.

Fluid type: ATF DEXRON® II

2. CHECK FLUID CONDITION

If the fluid smells burnt or is black, replace it as following procedures.

(Transmission and transfer case)

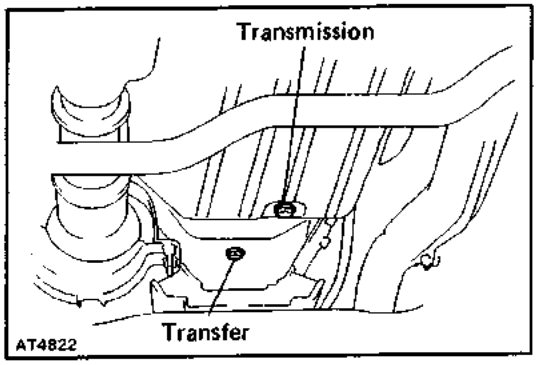

(a) Remove the drain plugs and drain the fluid.

(b) Reinstall the drain plugs securely.

(c) With the engine OFF, add new fluid through the oil filler tube.

Fluid type: ATF DEXRON® II

Capacity: liter (US qts, Imp. qts)

	Transmission	Transfer
Drain and refill	4.5 (4.8, 4.0)	
	* 3.8 (4.0, 3.	*1.2 (1.3, 1.1)
Total	10.3 (10.9, 9.1)	

*: Reference capacity when replacing transmission or transfer valve body.

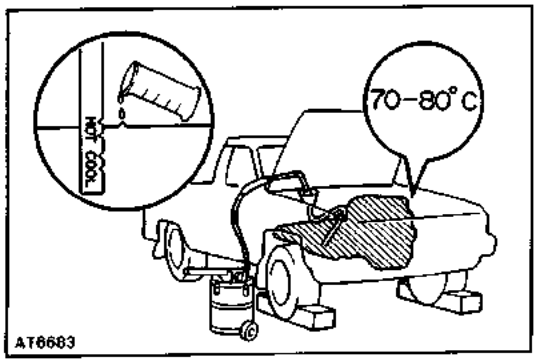

(d) Start the engine and shift the shift lever into all po–sitions from P to L position and then shift into P po–sition.

(e) With the engine idling, check the fluid level. Add fluid up to the COOL level on the dipstick.

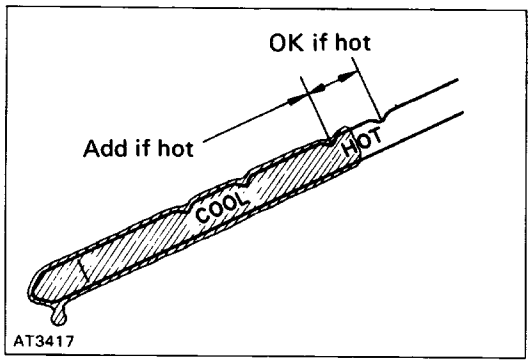

(f) Check the fluid level with the normal operating temperature (70–80˚C or 158–176˚F) and add as necessary.

NOTICE: Do not overfill.

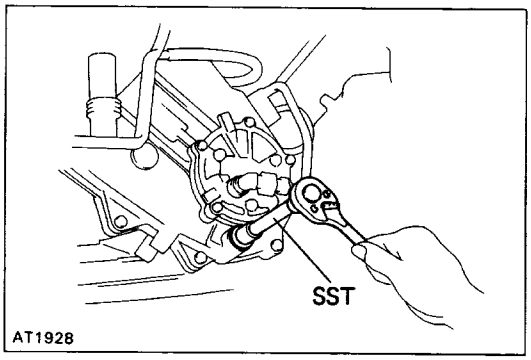

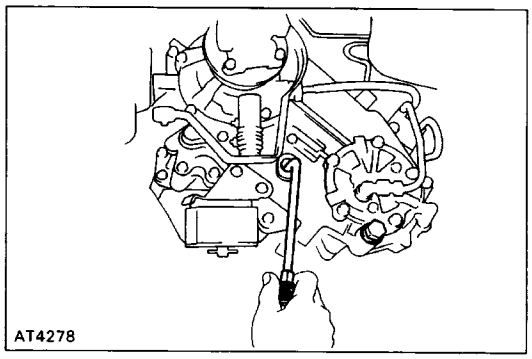

(Transfer chain case)

(a) Remove the transfer under cover.
(b) Remove the drain plug with SST and drain the fluid.
SST 09043–38 100
(c) Reinstall the drain plug securely with SST.
(d) With the engine OFF, add new fluid through the filler hole.

Fluid type: ATF DEXRON® II
Capacity:
Total 1.1 liters
(1.2 US qts, 1.0 Imp. qts)
Drain and refill 0.8 liters
(0.8 US qts, 0.7 Imp. qts)

(e) Check the fluid level.
(f) Install the transfer under cover.

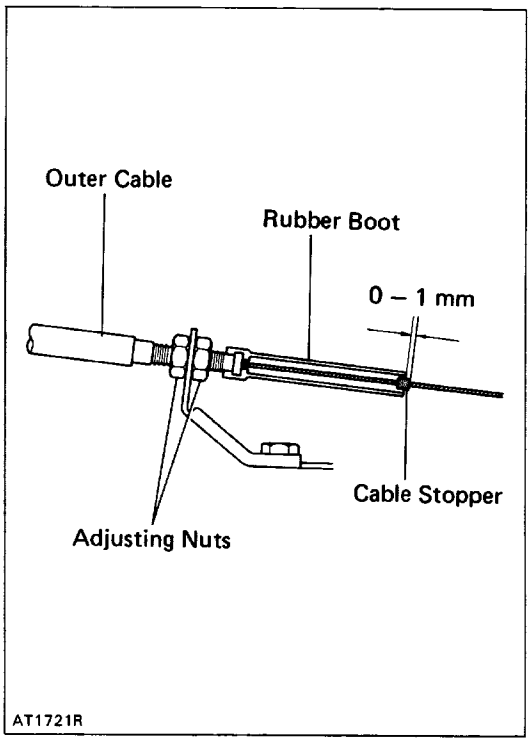

3. INSPECT THROTTLE CABLE

(a) Depress the accelerator pedal all the way and check that the throttle valve opens fully.
HINT: If the valve does not open fully, adjust the accelerator cable.
(b) Fully depress the accelerator pedal.
(c) Measure the distance between the end of the boot and stopper on the cable.

Standard distance: 0–1 mm (0–0.04 in.)

If the distance is not standard, adjust the cable by the adjusting nuts.

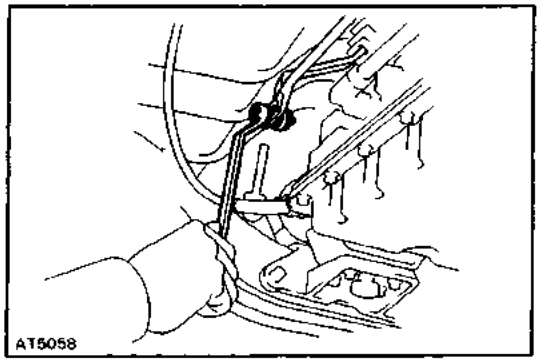

4. INSPECT TRANSMISSION SHIFT LEVER POSITION

When shifting the shift lever from the IV position to other positions, check that the lever can be shifted smoothly and accurately to each position and that the position in–dicator correctly indicates the position.

If the indicator is not aligned with the correct position, carry out the following adjustment procedures.

(a) Loosen the nut on the transmission control rod.
(b) Push the control shaft lever fully rearward.
(e) Return the control shaft lever two notches to N po–sition.
(d) Set the shift lever to N position.
(e) While holding the shift lever lightly toward the R po–sition side, tighten the nut.
(f) Start the engine and make sure that the vehicle moves forward when shifting the lever from the N to D position and reverse when shifting it to the R po–sition.

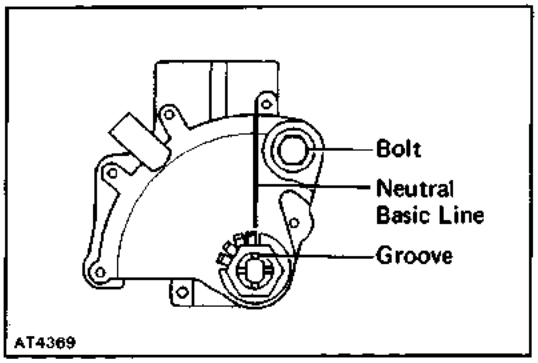

5. INSPECT PARK/ NEUTRAL POSITION SWITCH

Check that the engine can be started with the shift lever only in the N or P position, but not in other positions.

If not as stated above, carry out the following adjustment procedures.

(a) Loosen the park/neutral position switch bolt and set the shift lever to the N position.
(b) Align the groove and neutral basic line.
(c) Hold in position and tighten the bolt.

Torque: 13 N–m (130 kgf–cm, 9 ft–lbf)

6. INSPECT TRANSFER SHIFT LEVER POSITION

When shifting the shift lever from H2 position to H4 and L4 positions, check that the lever can be shifted smoothly and accurately to each position and that the po–sition indicator correctly indicates the position.

If the indicator is not aligned with the correct position, carry out the following adjustment procedures.

(a) Loosen the nut on the cross shaft.
(b) Push the control shaft lever fully forward.
(c) Return the control shaft lever one notch to H4 po–sition.
(d) Set the shift lever H4 position.
(e) While holding the shift lever lightly toward the L4 position side, tighten the nut.

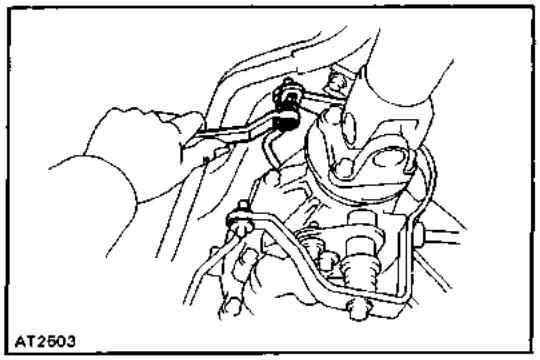

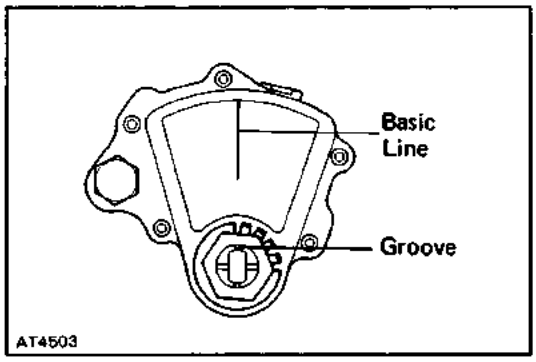

7. INSPECT TRANSFER POSITION SWITCH

If necessary, carry out the following adjustment procedures.

(a) Loosen the transfer position switch bolt and set the transfer shift lever to the H4 position.

(b) Align the groove and H4 basic line.

(c) Hold in position and tighten the bolt.

Torque: 13 N. m (130 kgf.cm, 9 ft. lbf)

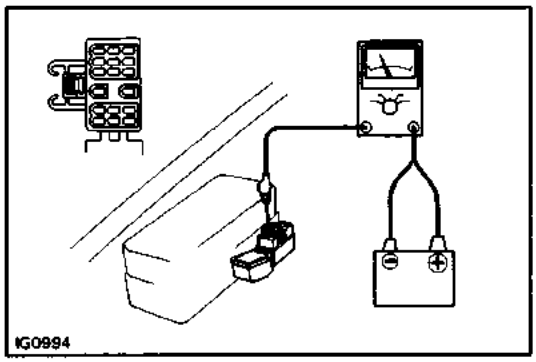

8. INSPECT IDLE SPEED (N POSITION)

Connect a tachometer test probe to the data link connector 1 terminal IG (3, inspect the idle speed.

Idle speed: 800 RPM

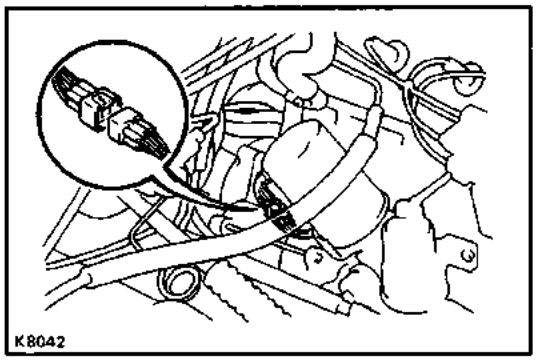

Manual Shifting Test

HINT: With this test, it can be determined whether the trouble lies within the electrical circuit or is a mechanical problem in the transmission.

1. DISCONNECT SOLENOID WIRE

2. INSPECT MANUAL DRIVING OPERATION

Check that the shift and gear positions correspond with the table below.

Transmission						Transfer (Reference)		
Shift position	D position	2 position	L position	R position	P position	H2 position	H4 position	L4 position
Gear position	O/D	3rd	1 st	Reverse	Pawl Lock	High Gear 2W D	High Gear 4WD	High Gear 4WD

HINT: If the L, 2 and D position gear positions are difficult to distinguish, perform the following road test.

- While driving, shift through the L, 2 and D positions. Check that the gear change corresponds to the shift position.

  If any abnormality is found in the above test, the problem lies in transmission itself.

3. CONNECT SOLENOID WIRE

4. CANCEL OUT DIAGNOSTIC TROUBLE CODE

(See page AT–111)

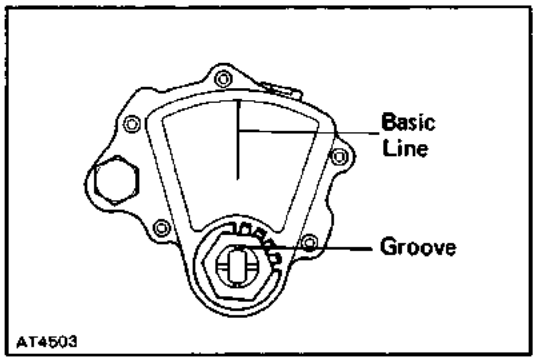

7. INSPECT TRANSFER POSITION SWITCH

If necessary, carry out the following adjustment procedures.

(a) Loosen the transfer position switch bolt and set the transfer shift lever to the H4 position.

(b) Align the groove and H4 basic line.

(c) Hold in position and tighten the bolt.

Torque: 13 N. m (130 kgf.cm, 9 ft. lbf)

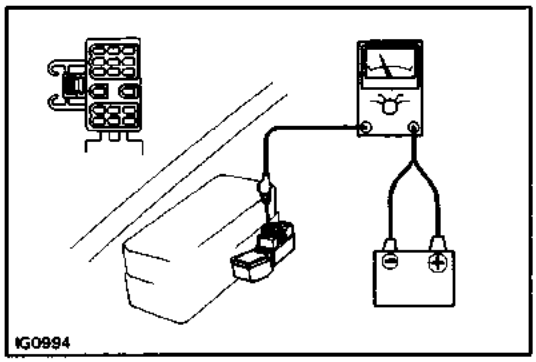

8. INSPECT IDLE SPEED (N POSITION)

Connect a tachometer test probe to the data link connector 1 terminal IG (3, inspect the idle speed.

Idle speed: 800 RPM

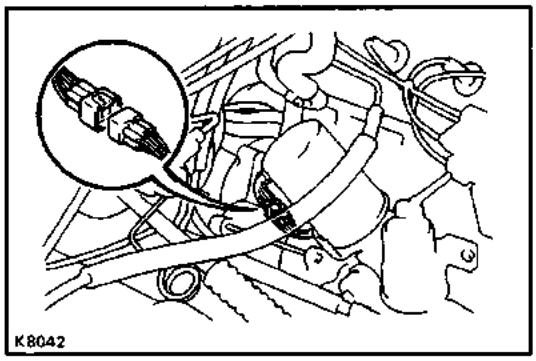

Manual Shifting Test

HINT: With this test, it can be determined whether the trouble lies within the electrical circuit or is a mechanical problem in the transmission.

1. DISCONNECT SOLENOID WIRE

2. INSPECT MANUAL DRIVING OPERATION

Check that the shift and gear positions correspond with the table below.

Transmission						Transfer (Reference)		
Shift position	D position	2 position	L position	R position	P position	H2 position	H4 position	L4 position
Gear position	O/D	3rd	1 st	Reverse	Pawl Lock	High Gear 2W D	High Gear 4WD	High Gear 4WD

HINT: If the L, 2 and D position gear positions are difficult to distinguish, perform the following road test.

- While driving, shift through the L, 2 and D positions. Check that the gear change corresponds to the shift position.
  If any abnormality is found in the above test, the problem lies in transmission itself.

3. CONNECT SOLENOID WIRE

4. CANCEL OUT DIAGNOSTIC TROUBLE CODE

(See page AT–111)

REFERENCE: Possible gear positions in accordance with solenoid operating conditions.

Position	NORMAL			NO. 1 SOLENOID MALFUNCTIONING			NO.2 SOLENOID MALFUNCTIONING			BOTH SOLENOIDS MALFUNCTIONING		
	Solenoid Valve		Gear Position	Solenoid Valve		Gear Position	Solenoid Valve		Gear Position	Solenoid Valve		Gear Position
	No. 1	No. 2		No. 1	No. 2		No. 1	No. 2		No. 1	No.2	
D position	**ON**	OFF	1 st	**X**	**ON**	3rd	**ON**	**X**	**1st**	**X**	**X**	O/D
	ON	**ON**	2nd	**X**	**ON**	3rd	OFF	**X**	O/D	**X**	**X**	O/D
	OFF	**ON**	3rd	**X**	**ON**	3rd	OFF	**X**	O/D	**X**	**X**	O/D
	OFF	OFF	O/D	**X**	OFF	O/D	OFF	**X**	O/D	**X**	**X**	O/D
2 position	**ON**	OFF	1 st	**X**	**ON**	3rd	**ON**	**X**	**1st**	**X**	**X**	3rd
	ON	**ON**	2nd	**X**	**ON**	3rd	OFF	**X**	3rd	**X**	**X**	3rd
	OFF	**ON**	3rd	**X**	**ON**	3rd	OFF	**X**	3rd	**X**	**X**	3rd
L position	**ON**	OFF	**1st**	**X**	OFF	**1st**	**ON**	**X**	1 st	**X**	**X**	**1st**
	ON	**ON**	2nd	**X**	**ON**	2nd	**ON**	**X**	1 st	**X**	**X**	**1st**

X: Malfunctions

Electronic Control System

PRECAUTION

Do not open the cover or the case of the ECM and various computer unless absolutely necessary. (If the IC terminals are touched, the IC may be destroyed by static electricity.)

ELECTRONIC CONTROL CIRCUIT

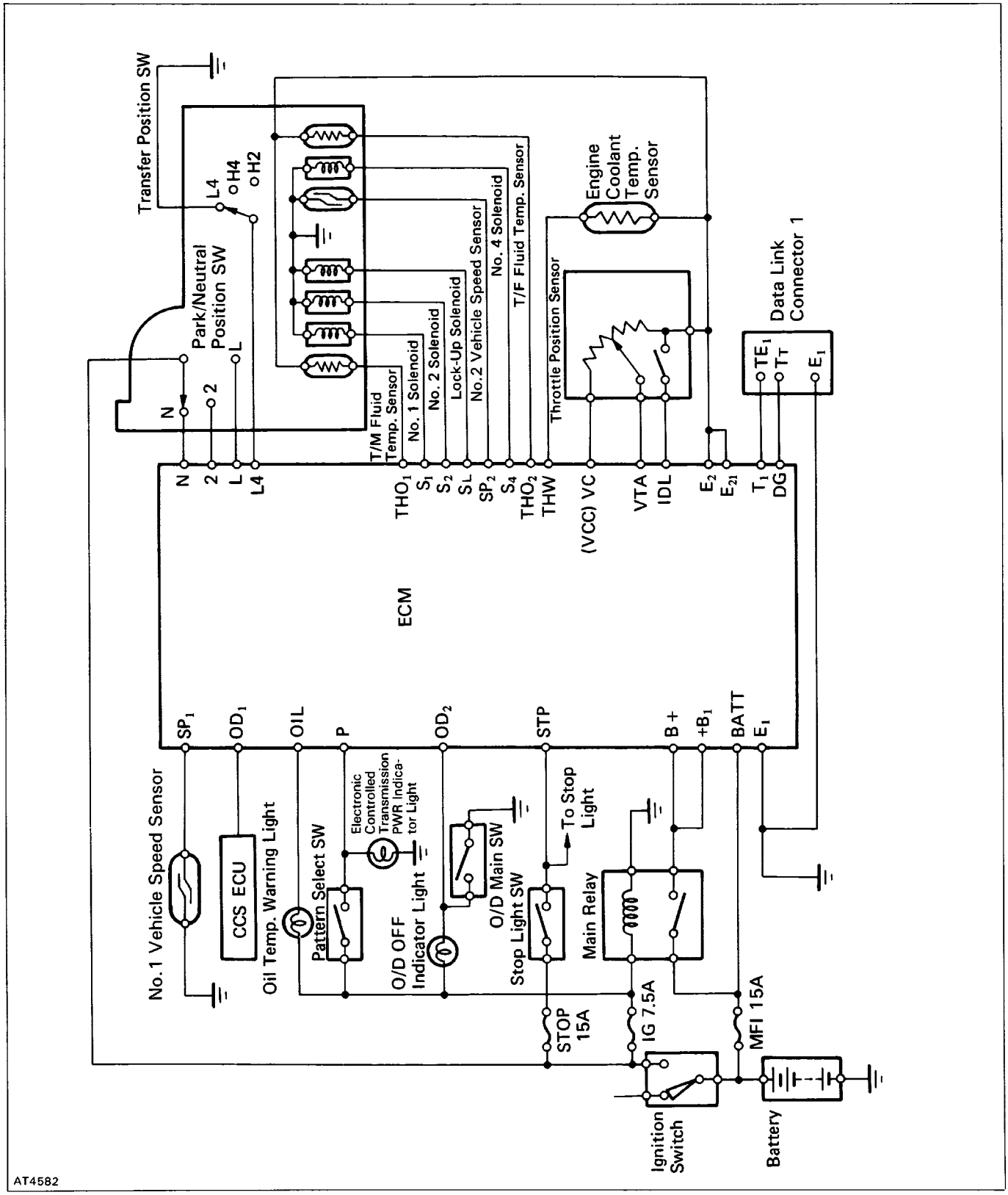

ELECTRONIC CONTROL COMPONENTS

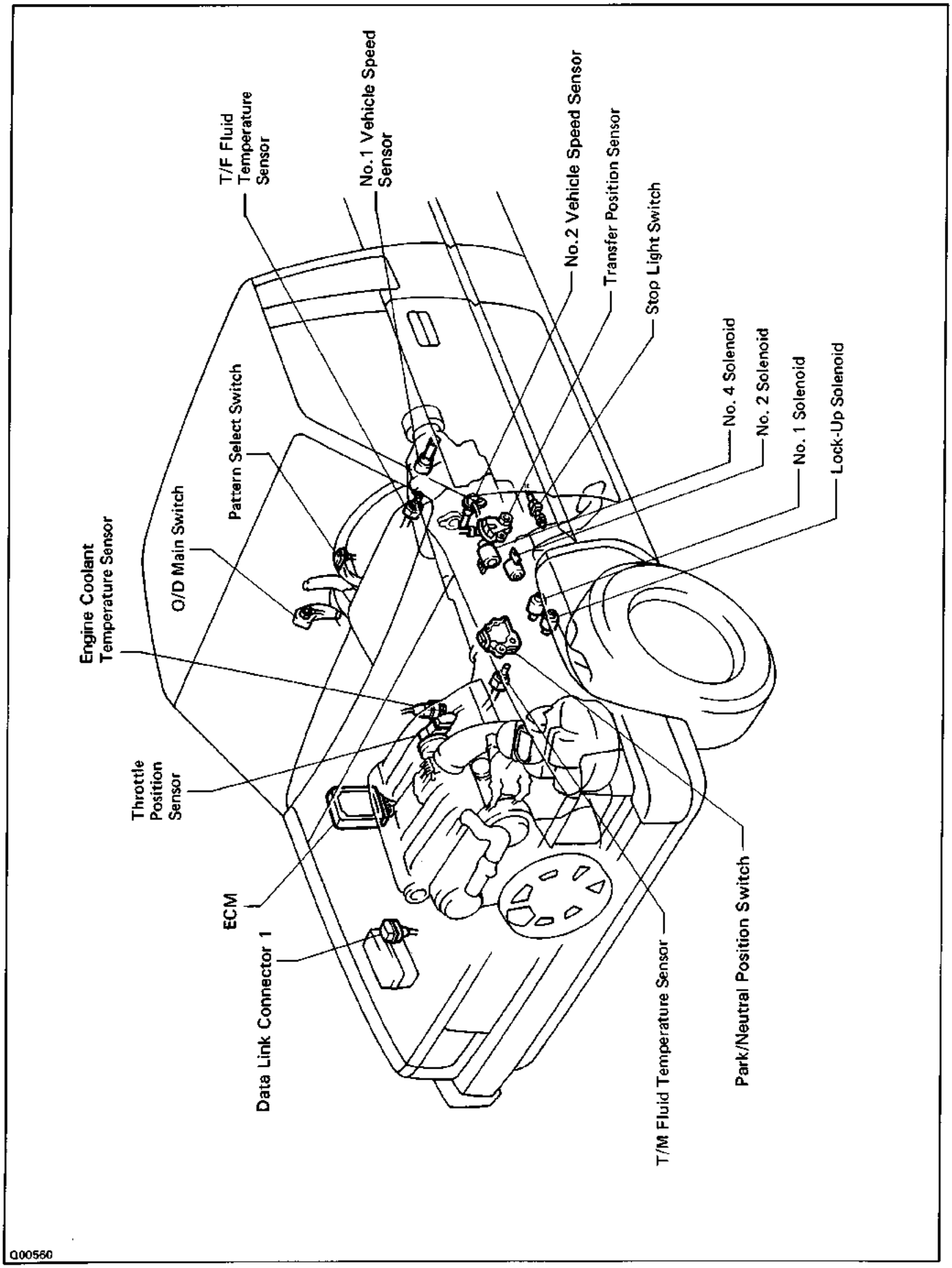

TROUBLESHOOTING FLOW–CHART

Trouble No. 1 No Shifting

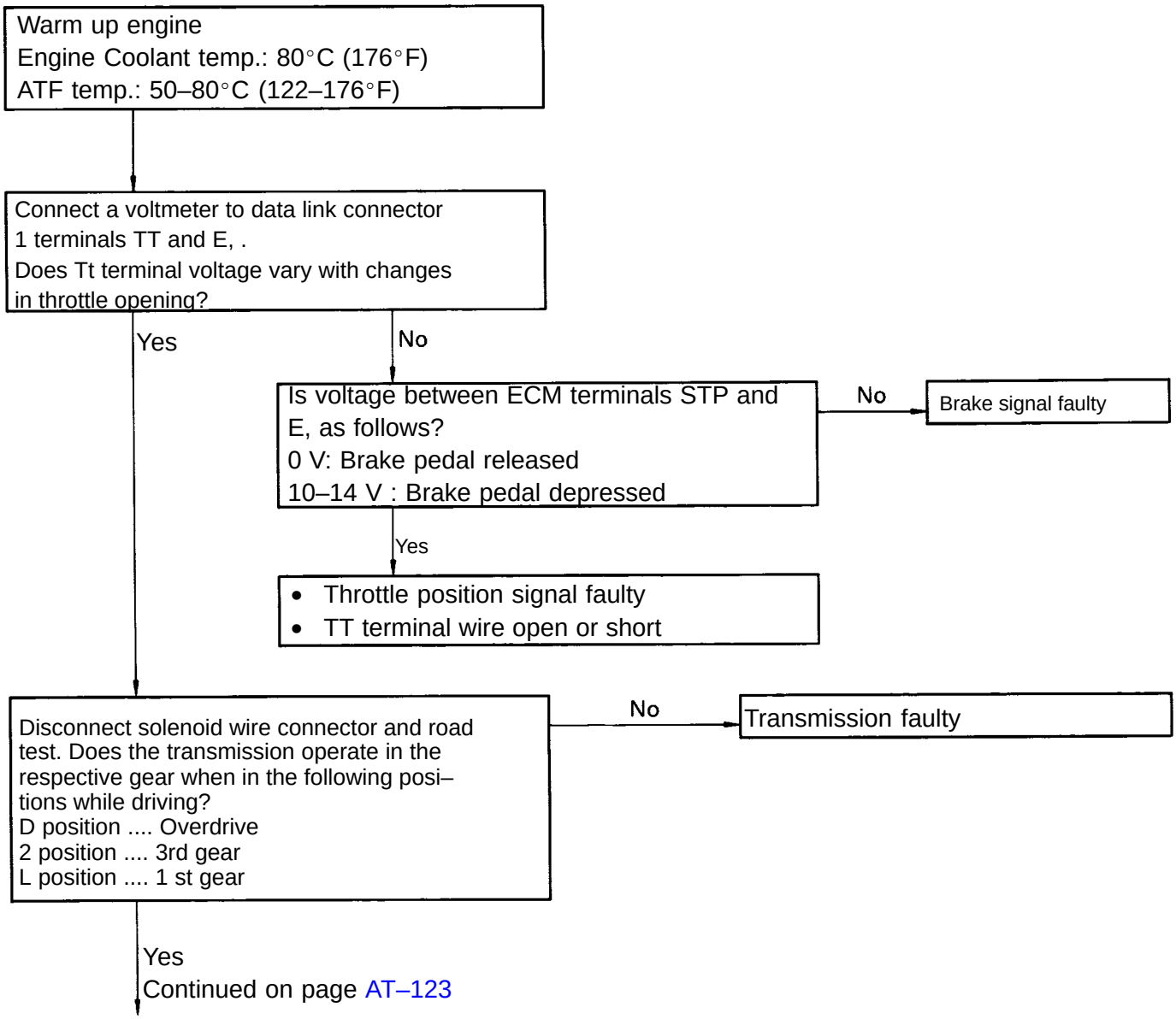

Continued on page AT–123

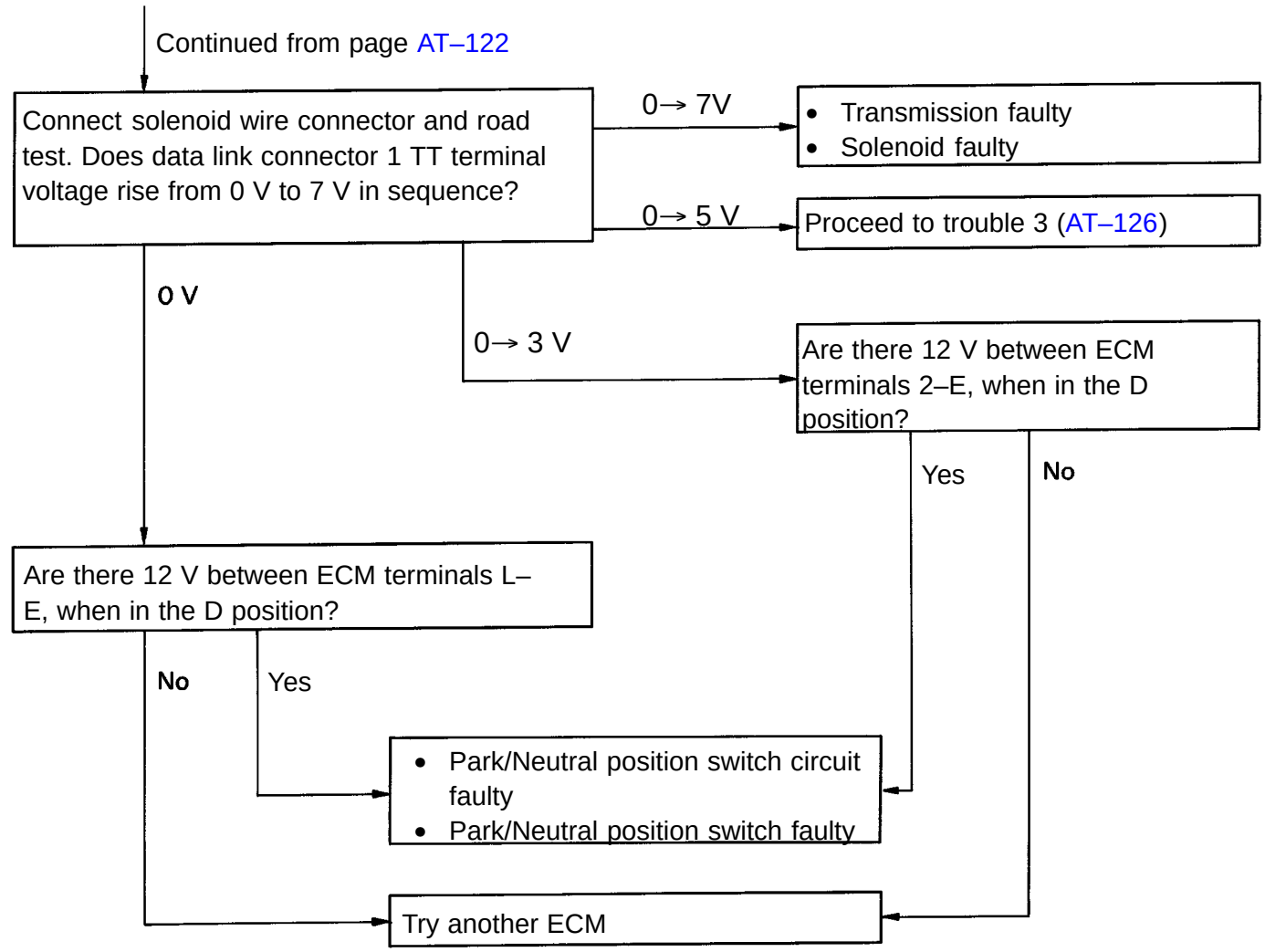
Continued from page AT–122
Connect solenoid wire connector and road test. Does data link connector 1 TT terminal voltage rise from 0 V to 7 V in sequence?
0→ 7V
• Transmission faulty
• Solenoid faulty
0→ 5 V
Proceed to trouble 3 (AT–126)
0 V
0→ 3 V
Are there 12 V between ECM terminals 2–E, when in the D position?
Yes
No
Are there 12 V between ECM terminals L–E, when in the D position?
No
Yes
• Park/Neutral position switch circuit faulty
• Park/Neutral position switch faulty
Try another ECM

Trouble No.2 Shift point too high or too low

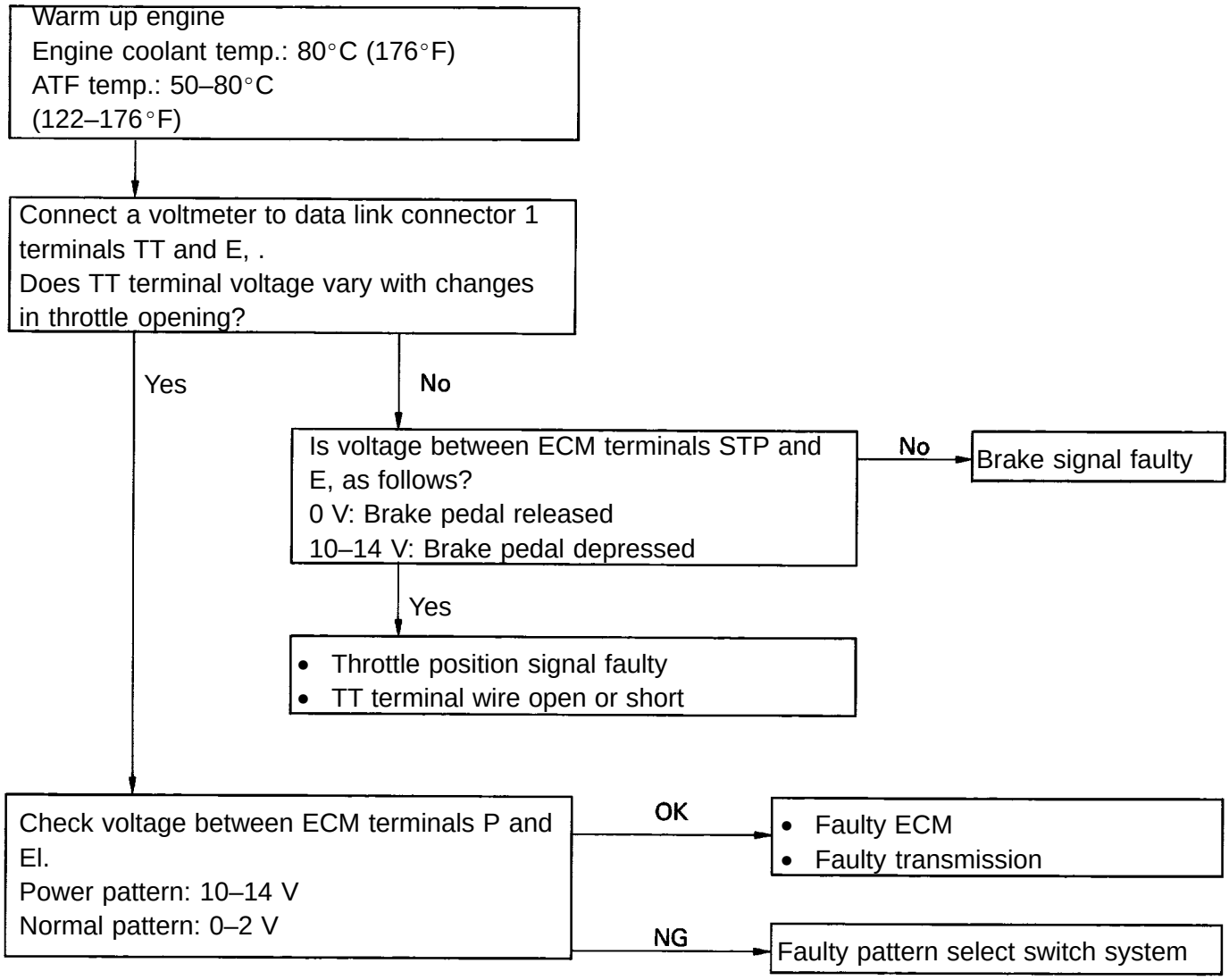

Trouble No.3 No up–shift to overdrive (After warm–up)

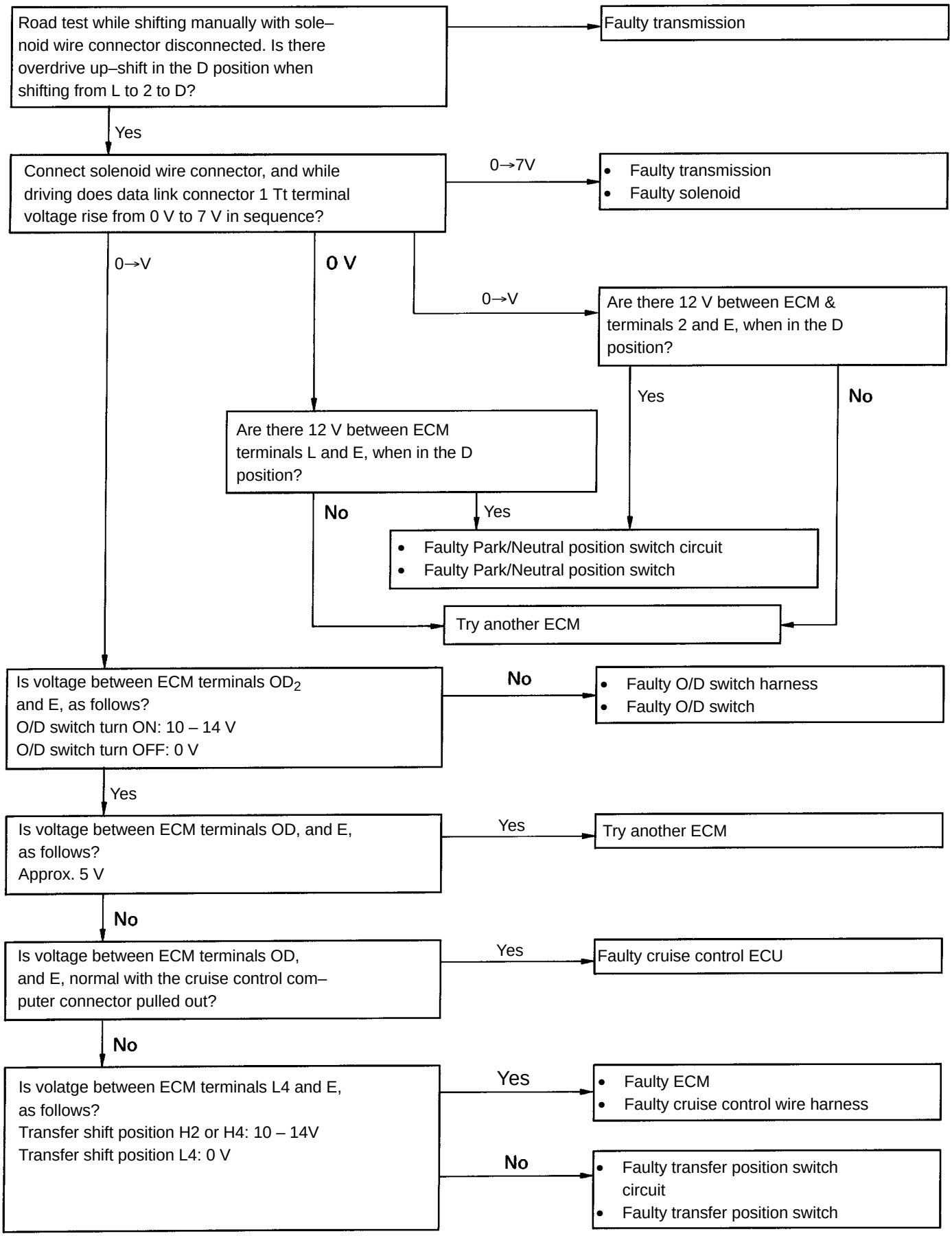

Trouble No. 4 No lock–up (After warm–up)

Warm up engine
Engine coolant temp.: 80°C(176°F)
ATF temp.: 50–80°C (1 22–176°F)

↓

Road test
Connect a voltmeter to data link connector 1 terminals TT and E, . Is there 7, 5 or 3 V in the lock–up position while driving?

→ Yes →
- Lock–up solenoid stuck
- Faulty transmission
- Faulty lock–up mechanism

↓ No

Is voltage between ECM STP and E, termi–nals as follows?
Brake pedal depressed: 10–14 v
Brake pedal released: 0 v

→ No → Faulty brake signal

↓ No

Is voltage between ECM terminals L4 and E, as follows?
Transfer shift position H2 or H4: 10–14V
Transfer shift position L4: 0 v

→ Yes → Faulty throttle position signal

↓ No

- Faulty transfer position switch circuit
- Faulty transfer position switch

Trouble No.5 **Transfer gear no change L4 from H4**

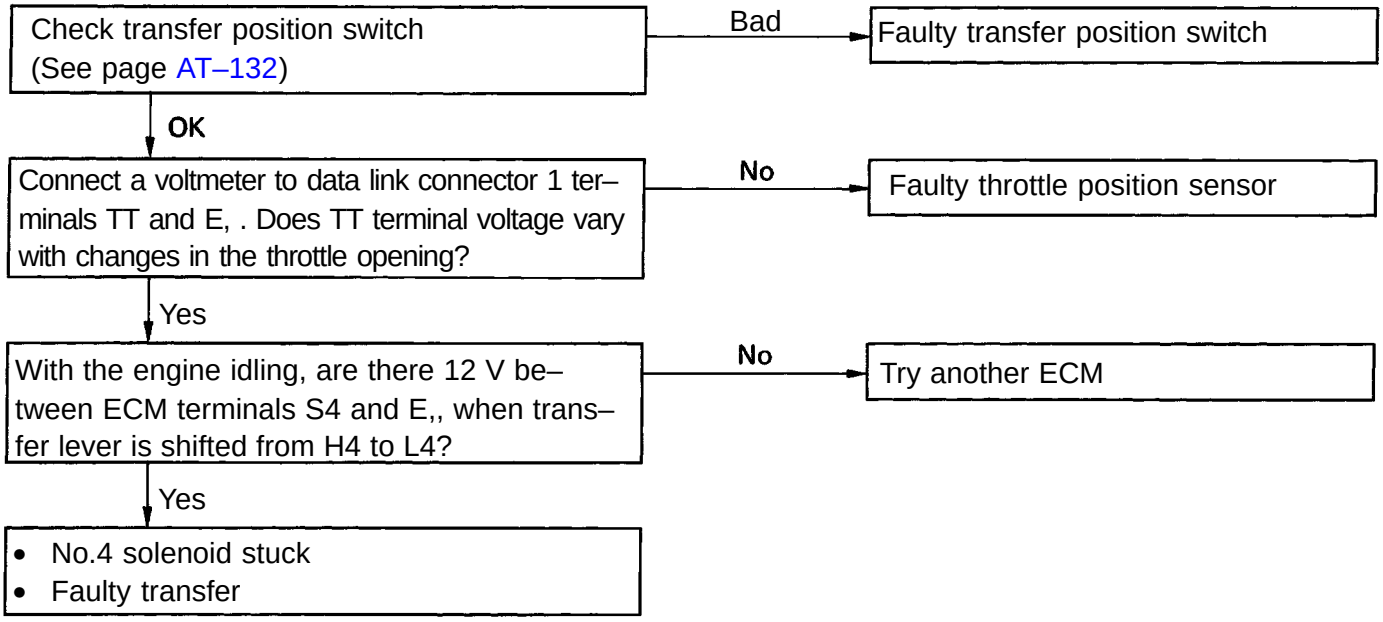

INSPECTION OF TT TERMINAL VOLTAGE

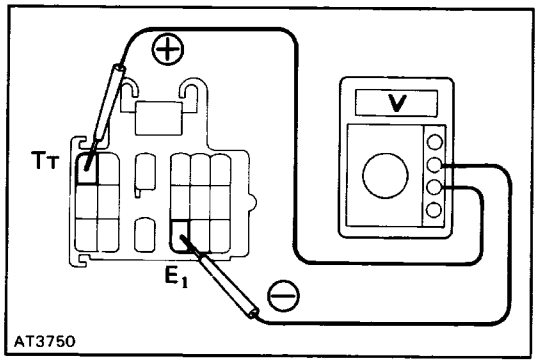

1. INSPECT THROTTLE POSITION SENSOR SIGNAL

(a) Turn the ignition switch to ON. Do not start the en–gine.

(b) Connect a voltmeter to data link connector 1 termi–nals Tt and E,.

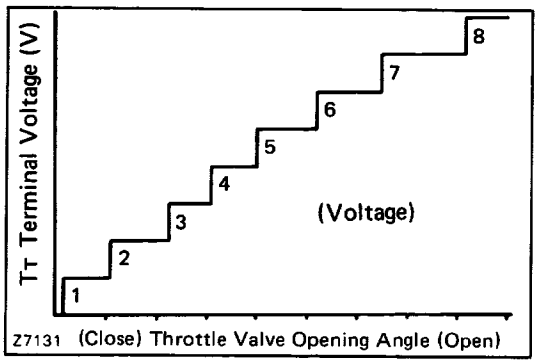

(c) While slowly depressing the accelerator pedal, check that TT terminal voltage rises in sequence. If the voltage does not change in proportion to the throt–tle opening angle, there is a malfunction in the throttle position sensor or circuit.

2. INSPECT BRAKE SIGNAL

(a) Depress the accelerator pedal until the TT terminal indicates 8 V.

(b) Depress the brake pedal and check the voltage read–ing from the TT terminal.
Brake pedal depressed ..... 0 V
Brake pedal released ..... 8 V

If not as indicated, there is a malfunction in either the stop light switch or circuit.

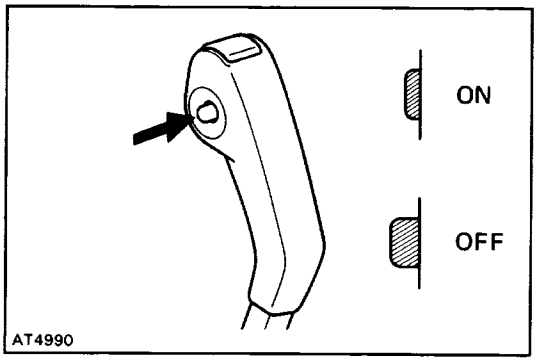

3. INSPECT EACH UP–SHIFT POSITION

(a) Warm up the engine.
Engine Coolant temperature: 800C (1760F)

(b) Turn the O/D switch to ”ON”.

(c) Place the pattern select switch in ”Normal” and the shift lever into the D position.

(d) During a road test (above 10 km/h or 6 mph)check that voltage at the TT terminal is as indicated below for each up–shift position.

If the voltage rises from 0 V to 7 V in the sequence shown, the control system is okay.

The chart on the left shows the voltmeter reading and corresponding gears.

HINT: Determine the gear position by a light shock or change in engine rpm when shifting. The lock–up clutch will turn ON only infrequently during normal 2nd and 3rd gear operation. To trigger this action, press the accelera–tor pedal to 50% or more of its stroke. At less than 50%, the voltage may change in the sequence 2 V–4 V–6 V–7V.

T_T Terminal (V)	Gear Position
0	1st
2	2nd
3	2nd Lock-up
4	3rd
5	3rd Lock-up
6	O/D
7	O/D Lock-up

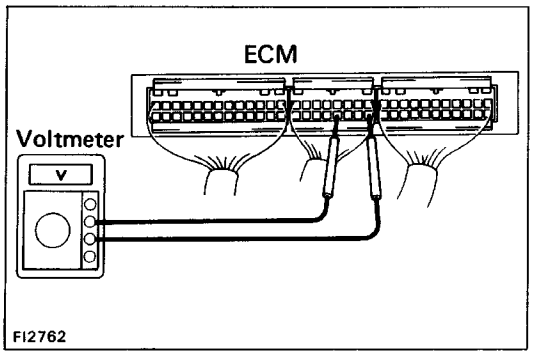

INSPECTION OF ELECTRONIC CONTROL COMPONENTS

1. INSPECT VOLTAGE OF ECM CONNECTOR

(a) Remove the cowl side trim of passenger side.
(b) Turn on the ignition switch.
(c) Measure the voltage at each terminal.

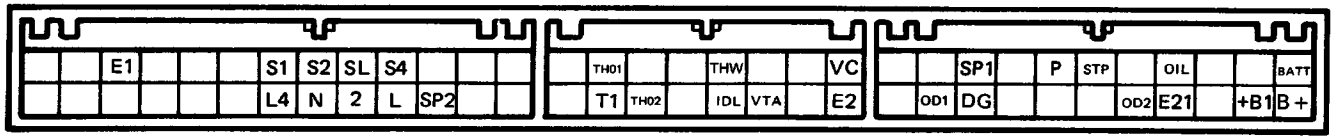

Terminal	Measuring condition		Voltage i V j
$S_1 - E_1$	–		10 – 14
$S_2, S_L - E_1$	–		0
$S_4 - E_1$	Transfer shift position H2 or H4		0
	Transfer shift position L4		10 – 14
$P - E_1$	PWR pattern		10 – 14
	NORM pattern		0 – 2
$STP - E_1$	Brake pedal is depressed		10 – 14
	Brake pedal is released		0
$THW - E_2 (E_{21})$	Engine Coolant temp. 80°C (176°F)		0.1 – 1.0
$IDL - E_2 (E_{21})$	Throttle valve fully closed		0
	Throttle valve open		10 – 14
$VTA - E_2(E_{21})$	Throttle valve fully closed		0.1 – 1.0
	Throttle valve fully open		3 – 5
$VC (VCC) - E_2 (E_{21})$	–		4 – 6
$OD_1 - E_1$	–		5
$OD_2 - E_1$	O/D main switch turned ON		10 – 14
	O/D main switch turned OFF		0
$SP_1 - E_1$	Cruise control main switch OFF	Standing still	0 or 5
		Vehicle moving	2 – 3
$SP_2 - E_1$	Standing still		0 or 5
	Vehicle moving		2 – 3

Terminal	Measuring condition	Voltage (V)
$N - E_1$	N position	10 – 14
	Except N position	0 – 2
$2 - E_1$	2 position	10 – 14
	Except 2 position	0 – 2
$L - E_1$	L position	10 – 14
	Except L position	0 – 2
$L_4 - E_1$	Transfer shift position H2 or H4	10 – 14
	Transfer shift position L4	0
$OIL - E_1$	–	10 – 14
THO_1, $THO_2 - E_2$ THO (E_{21})	Fluid temp. 20°C (68°F)	4 – 5
$B+ (+B_1) - E_1$	–	10 – 14
$BATT - E_1$	–	10 – 14

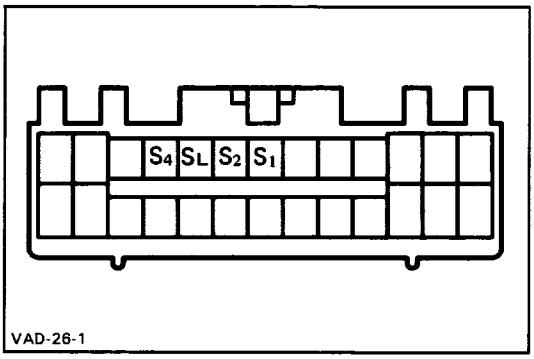

2. INSPECT SOLENOID

(a) Disconnect the connector from ther ECM.

(b) Measure the resistance between S,, S2, SL, S4 and ground.

Resistance: 11–15Ω

(c) Apply battery positive voltage to each terminal. Check that an operation noise can be heard from the solenoid.

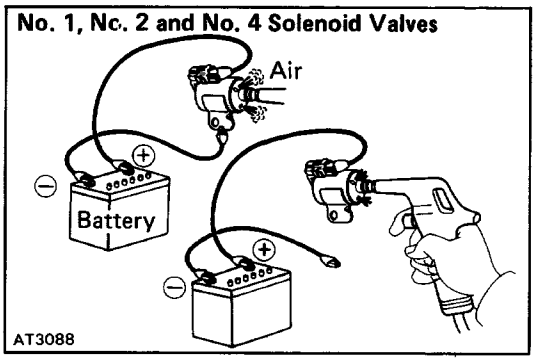

3. CHECK SOLENOID SEALS

If there is foreign material in the solenoid valve, there will be no fluid control even with solenoid operation.

(a) Check No. 1, No.2 and No.4 solenoid valves.

Check that the solenoid valves do not leak when low–pressure compressed air is applied.

When supply battery positive voltage to the solenoids, check that the solenoid valves open.

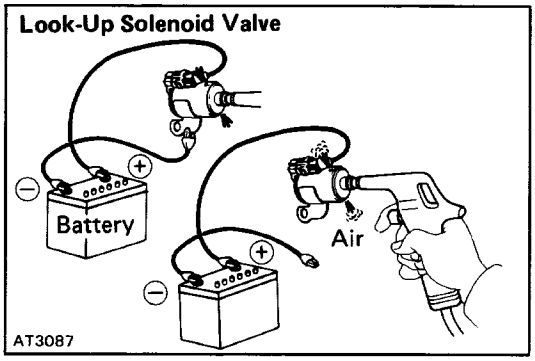

(b) Check the lock–up solenoid valve.

Applying 490 kPa (5 kgf/cm2, 71 psi) of com–pressed air, check that the solenoid valve opens.

When supply battery positive voltage to the solenoid, check that the solenoid valve does not leak the air.

If a malfunction is found during voltage inspection (step 1.), inspect the components listed below.

4. INSPECT PARK/ NEUTRAL POSITION SWITCH
(See page AT–144)

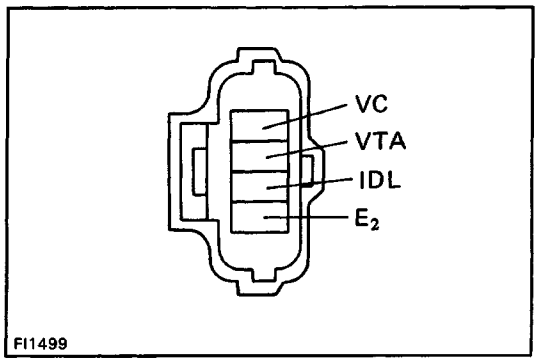

5. INSPECT THROTTLE POSITION SENSOR
Using an ohmmeter, check the resistance between each terminal.

Terminal	Throttle valve condition	Resistance (kΩ)
IDL–E2	Fully closed	Less than 2.3
	Open	Infinity
VC–E2	–	3.9–9.0
VTA–E2	Fully closed	0.47–6.1
	Fully open	3.1–12.1

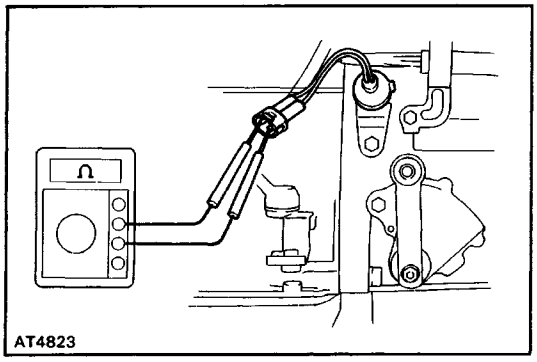

6. INSPECT NO.2 VEHICLE SPEED SENSOR
(a) Jack up the rear wheel on one side.
(b) Connect an ohmmeter between the terminals.
(c) Spin the wheel and check that the meter needle de–flects from 0Ω to ∞Ω.

7. INSPECT NO.1 VEHICLE SPEED SENSOR
(See step 6. on page AT–131)

8. INSPECT PATTERN SELECT SWITCH
Using an ohmmeter, check the continuity of the terminals for each switch position.
HINT: As there are diodes inside, be careful of the tester probe polarity.

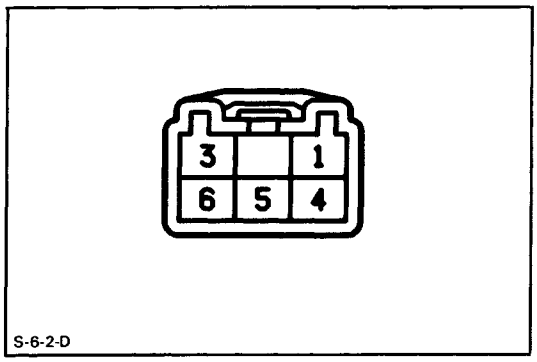

Pattern \ Terminal	4	6
PWR	○	○
NORM		

9. INSPECT O/D SWITCH
Using an ohmmeter, check the continuity of the terminals for each switch position.

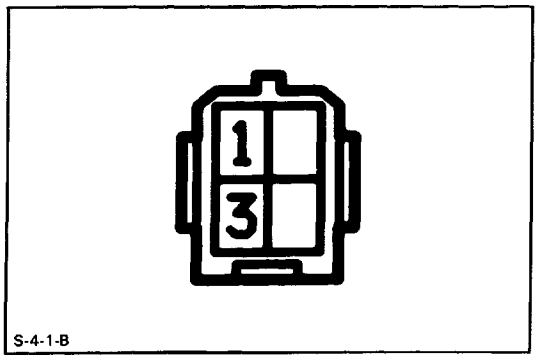

SW position \ Terminal	1	3
ON		
OFF	○	○

10. INSPECT ENGINE COOLANT TEMPERATURE SENSOR
(See page FI–201)

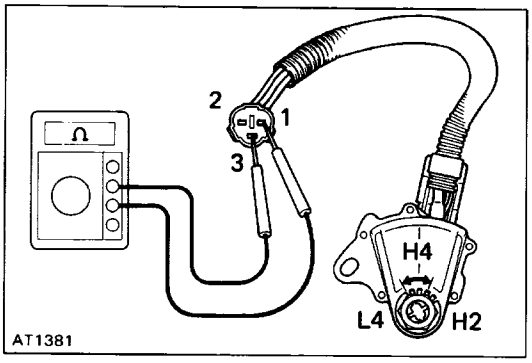

11. INSPECT TRANSFER POSITION SWITCH

Check that there is continuity between each terminal.

Shift position \ Terminal	1	2	3
H4	○		○
L4	○	○	○
H2			

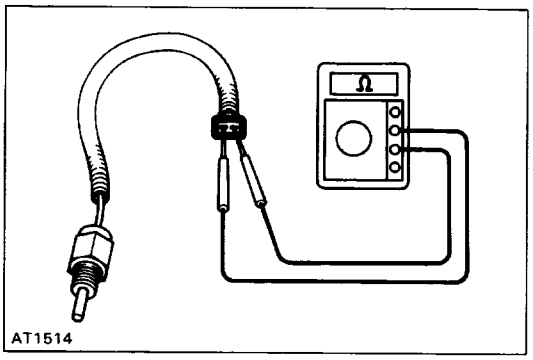

12. INSPECT TRANSMISSION AND TRANSFER FLUID TEMPERATURE SENSOR

Measure the resistance between terminals.

Oil Temperature	Resistance (Ω)
20°C (68°F)	5k – 20k
120°C (248°F)	540 – 690
150°C (302°F)	300 – 340

Mechanical System Tests

STALL TEST

The object of this test is to check the overall performance of the transmission and engine by measuring the stall speeds in the D and R positions.

NOTICE:

- **Perform the test at normal operating fluid temperature (50–80°C or 122–176°F).**
- **Do not continuously run this test longer than 5 seconds.**
- **To ensure safety, conduct this test in a wide, clear, level area, which provides good traction.**
- **The stall test should always be carried out in pairs. One should observe the conditions of wheels or wheel stoppers outside the vehicle while the other is performing the test.**

MEASURE STALL SPEED

(a) Chock the front and rear wheels.
(b) Connect a tachometer to the engine.
(c) Fully apply the parking brake.
(d) Keep your left foot pressed firmly on the brake pedal.
(e) Shift the transfer lever to the H2 position.
(f) Start the engine.
(g) Shift into the D position. Step all the way down on the accelerator pedal with your right foot.
Quickly read the stall speed at this time.

NOTICE: Release the accelerator pedal and stop test if the rear wheels begin to rotate before the engine speed reaches specified stall speed.

Stall speed: 2,850 f 150 RPM

(h) Perform the same test in R position.

EVALUATION

(a) If the stall speed is the same for both positions but lower than specified value:
Engine output may be insufficient
Stator one–way clutch is not operating properly

HINT: If more than 600 RPM below the specified value, the torque converter clutch could be faulty.

(b) If the stall speed in D position is higher than specified:
Line pressure too low
Forward clutch slipping
No.2 one–way clutch not operating properly
O/D one–way clutch not operating properly
Transfer direct clutch slipping

(c) If the stall speed in R position is higher than specified:
Line pressure too low
Direct clutch slipping
First and reverse brake slipping
O/D one–way clutch not operating properly
Transfer direct clutch slipping

(d) If the stall speed in both R and D positions are higher than specified:
Line pressure too low
Improper fluid level
O/D one–way clutch not operating properly
Transfer direct clutch slipping

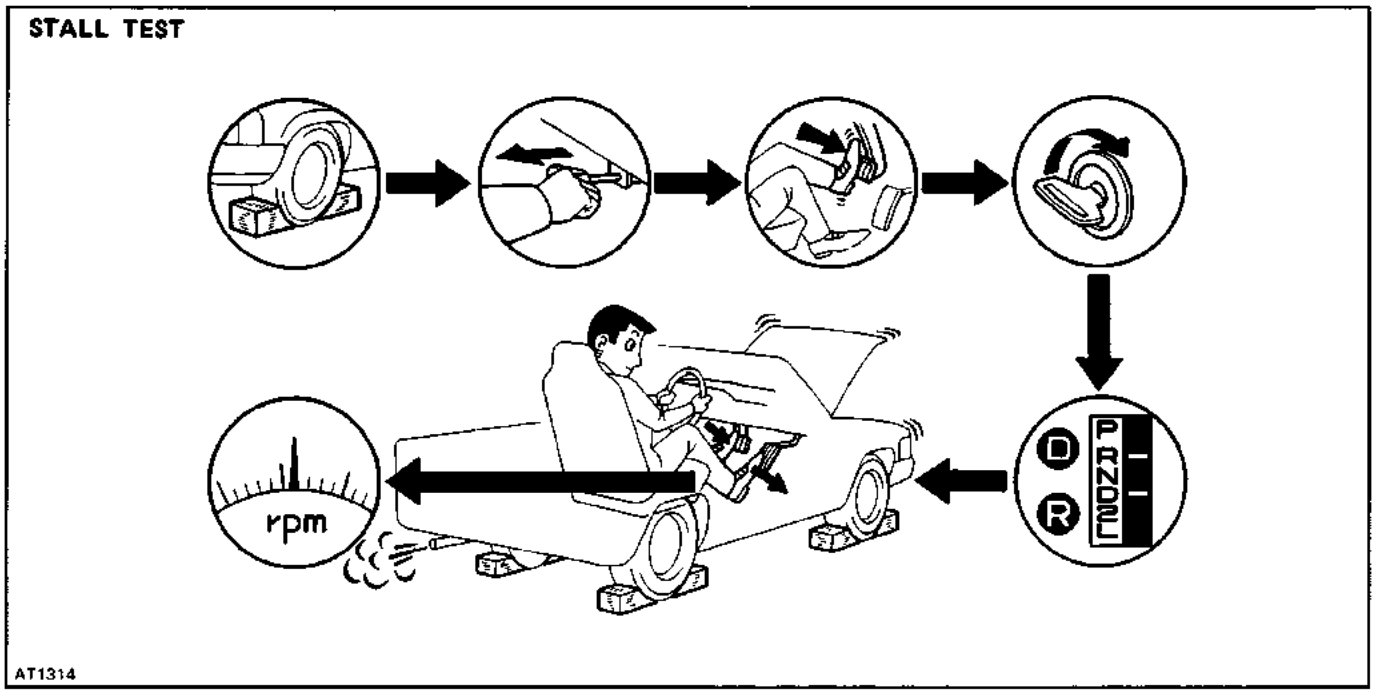

TIME LAG TEST

When the shift lever is shifted while the engine is idling, there will be a certain time lapse or lag before the shock can be felt. This is used for checking the condition of the O/D direct clutch, forward clutch, direct clutch and first and reverse brake.

NOTICE:

Perform the test at normal operating fluid temperature (50–80°C or 122–176°F).

Be sure to allow one minute interval between tests.

Make three measurements and take the average value.

MEASURE TIME LAG

(a) Fully apply the parking brake.

(b) Shift the transfer shift lever to the H2 position.

(c) Start the engine and check the idle speed.

Idle speed: 850 RPM

(N position)

(d) Shift the shift lever from N to D position. Using a stop watch, measure the time it takes from shifting the lever until the shock is felt.

Time lag: Less than 1.2 seconds

(e) In same manner, measure the time lag for N–R.

Time lag: Less than 1.5 seconds

EVALUATION

(a) If N–D time lag is longer than specified:

Line pressure too low

Forward clutch worn

O/D one–way clutch not operating properly

(b) If N–) R time lag is longer than specified:

Line pressure too low

Direct clutch worn

First and reverse brake worn

O/D one–way clutch not operating properly

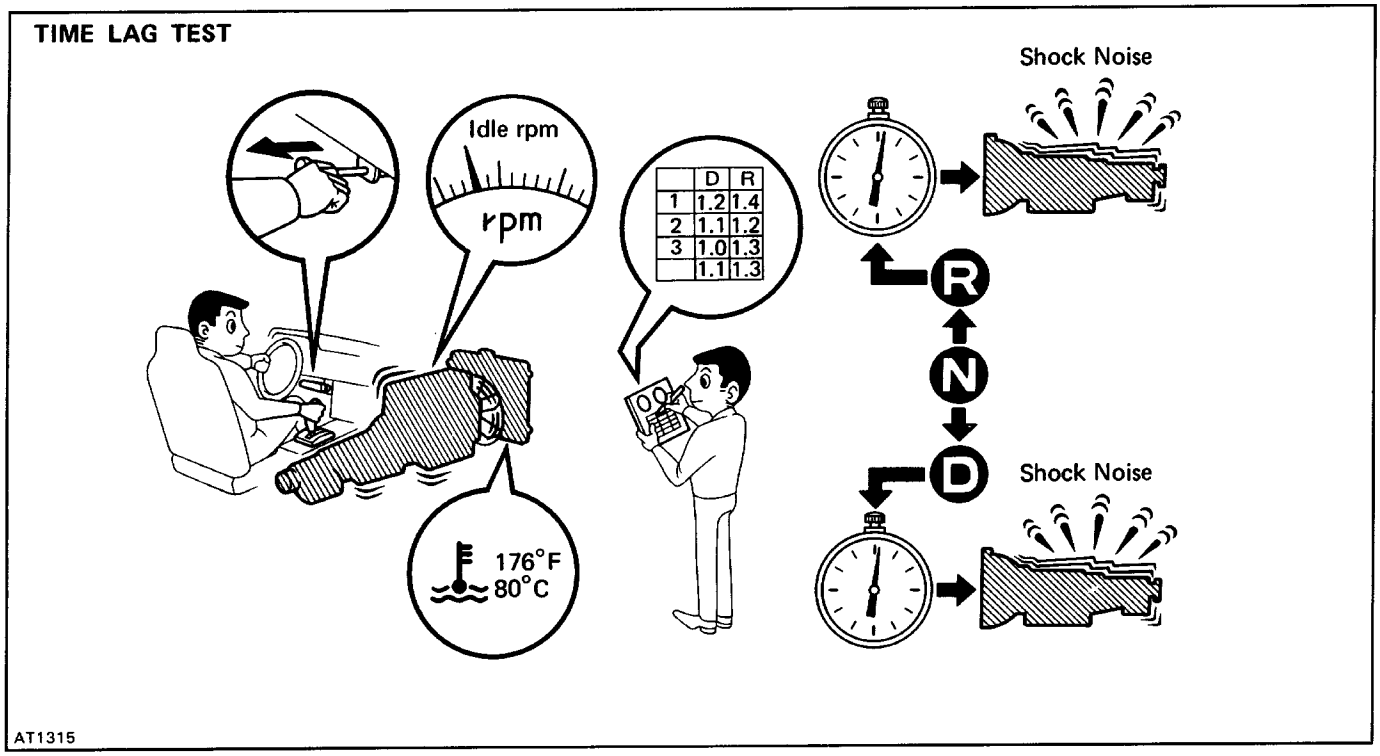

HYDRAULIC TEST
PREPARATION

(a) Warm up the transmission fluid.
(b) Remove the transmission case test plug and connect the hydraulic pressure gauge.
SST 09992–00094 (Oil pressure gauge)

NOTICE:

Perform the test at normal operating fluid temperature (50–80°C or 122–176°F).

The line pressure test should always be carried out in pairs. One should observe the conditions of wheels or wheel stoppers outside the vehicle while the other is performing the test.

MEASURE LINE PRESSURE

(a) Fully apply the parking brake and check the four wheels.
(b) Start the engine and check idling RPM.
(c) Keep your left foot pressed firmly on the brake pedal and shift into D position.
(d) Measure the line pressure when the engine is idling.
(e) Press the accelerator pedal all the way down. Quickly read the highest line pressure when engine speed reaches stall speed.

NOTICE: Release the accelerator pedal and stop test if the rear wheels begin to rotate before the en–
gine speed reaches specified stall speed.

(f) In the same manner, perform the test in R position.

kPa (kgf/cm2,psi)

D position		R position	
Idling	Stall	Idling	Stall
427 – 481 (4.3 – 4.9, 61 – 70)	1,118 – 1,363 (11.4 – 13.9, 162 – 198)	510 – 608 (5.2 – 6.2, 74 – 88)	1,373 – 1,716 (14.0 – 17.5, 199 – 249)

If the measured pressures are not up to specified values, recheck the throttle cable adjustment and perform a retest.

EVALUATION

(a) If the measured values at all positions are higher than specified:

Throttle cable out of adjustment
Throttle valve defective
Regulator valve defective

(b) If the measured values at all positions are lower than specified:

Throttle cable out of adjustment
Throttle valve defective
Regulator valve defective
Oil pump defective
O/D direct clutch defective
Transfer direct clutch defective (H2, H4)
Transfer front drive clutch defective (H4, L4)
Transfer low speed brake defective (L4)

(c) If pressure is low in the D position only:

D position circuit fluid leakage
Forward clutch defective

(d) If pressure is low in the R position only:

R position circuit fluid leakage
Direct clutch defective
First and reverse brake defective

HYDRAULIC TEST

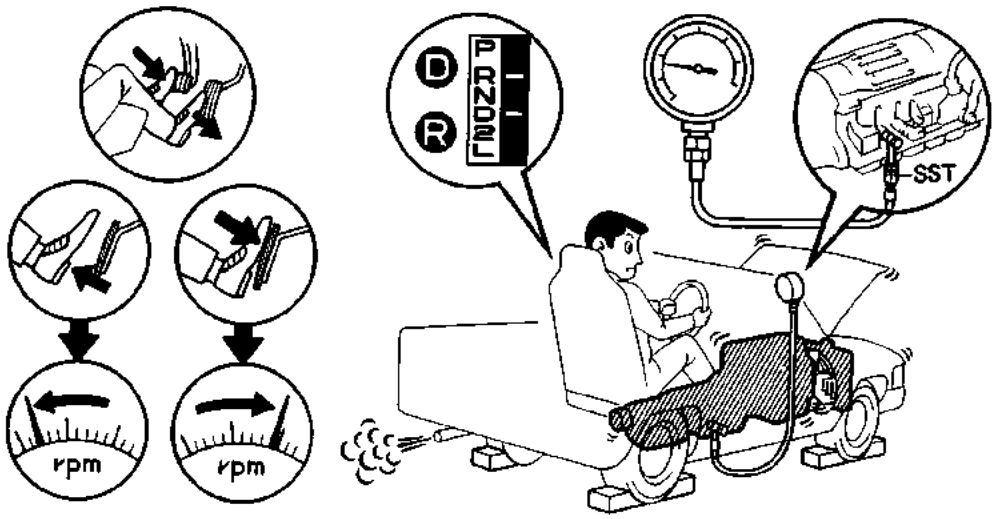

AT1316

ROAD TEST

NOTICE: Perform the test at normal operating fluid temperature (50–80°C or 122–176°F).

HINT: The transmission shift points for the H2, H4 and L4 transfer positions are different. Also, the O/D gear and lock–up are cancelled when L4 is engaged.

1. D POSITION TEST IN NORM AND PWR PATTERN POSITIONS

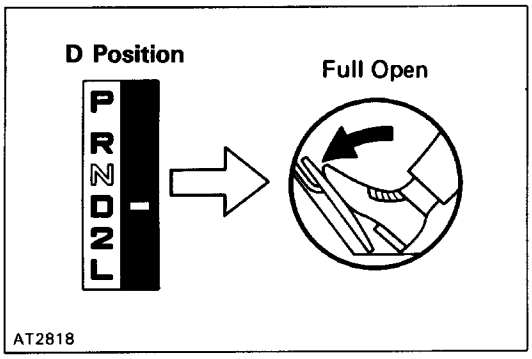

Shift into the D position and hold the accelerator pedal constant at the full throttle valve opening position.

Check the following:

(a) 1–2, 2–3 and 3–O/D up–shifts should take place, and shift points should conform to those shown in the automatic shift schedule.

Conduct a test under both Normal and Power patterns.

HINT: There is no O/D up–shift or lock–up when the engine coolant temp. is below 70°C (158°F).

EVALUATION

(1) If there is no 1–2 up–shift:

No. 2 solenoid is stuck

1–2 shift valve is stuck

(2) If there is no 2–3 up–shift:

No. 1 solenoid is stuck

2–3 shift valve is stuck

(3) If there is no 3–i O/D up–shift:

3–4 shift valve is stuck

(4) If the shift point is defective:

Throttle valve, 1–2 shift valve, 2–3 shift valve, 3–4 shift valve etc., are defective

(5) If the lock–up is defective:

Lock–up solenoid is stuck

Lock–up relay valve is stuck

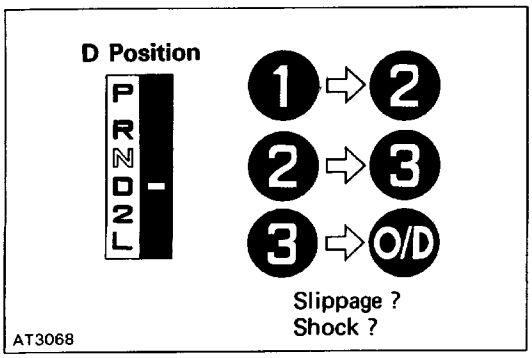

(b) In the same manner, check the shock and slip at the 1–) 2, 2–i 3, and 3–O/D up–shifts

EVALUATION

If the shock is excessive:

Line pressure–is too high

Accumulator is defective

Check ball is defective

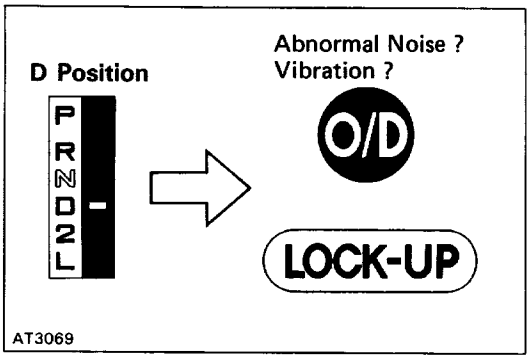

(c) Run at the D position lock–up or O/D gear and check for abnormal noise and vibration.

HINT: The check for the cause of abnormal noise and vibration must be made with extreme care as it could also
be due to loss of balance in the propeller shaft, differen–
tial, torque converter clutch, etc.

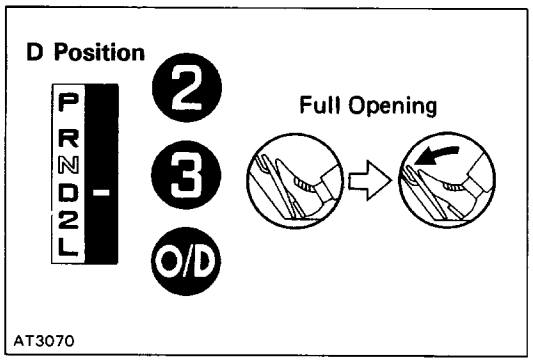

(d) While running in the D position, 2nd, 3rd and O/D gears, check to see that the possible kick–down ve–hicle speed limits for 2–1, 3–) 2 and O/D–3 kick–downs conform to those indicated on the auto–matic shift schedule.

(e) Check for abnormal shock and slip at kick–down.

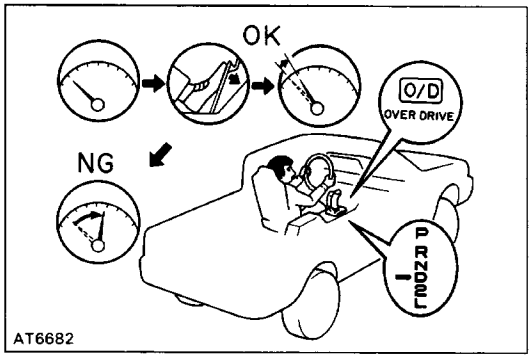

(f) Check for the lock–up mechanism.

(1) Drive in D position, O/D gear, at a steady speed (lock–up ON) of about 75 km/h (47 mph).

(2) Lightly depress the accelerator pedal and check that the engine RPM does not change abruptly. If there is a big jump in engine RPM, there is no lock–up.

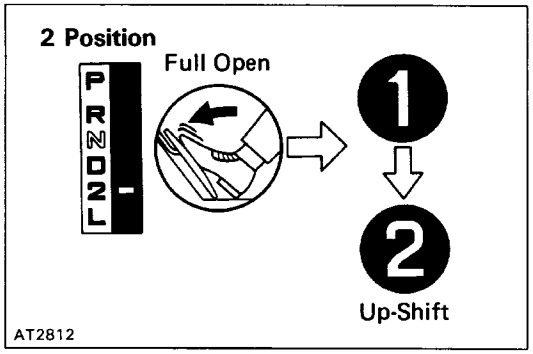

2. 2 POSITION TEST

Shift into the 2 position and, while driving with the acceler–ator pedal held constantly at the full throttle valve open–ing position, push in one of the pattern selectors and check on the following points.

(a) Check to see that the 1–2 up–shift takes place and that the shift point conforms to it shown on the au–tomatic shift schedule.

HINT:

There is no O/D up–shift and lock–up in the 2 position.

To prevent overrun, the transmission up–shifts into 3rd gear at around 100 km/h (62 mph) or more.

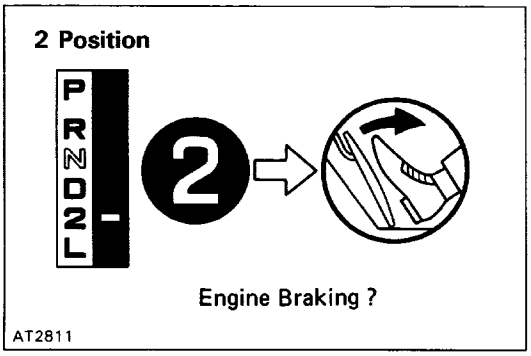

(b) While running in the 2 position and 2nd gear, release the accelerator pedal and check the engine braking effect.

EVALUATION

If there is no engine braking effect:

Second coast brake is defective

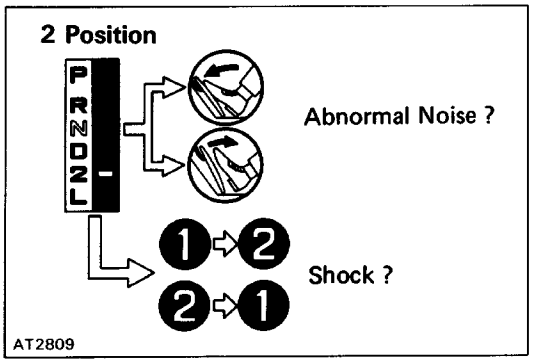

(c) Check for abnormal noise at acceleration and deceleration, and for shock at up–shift and down–shift.

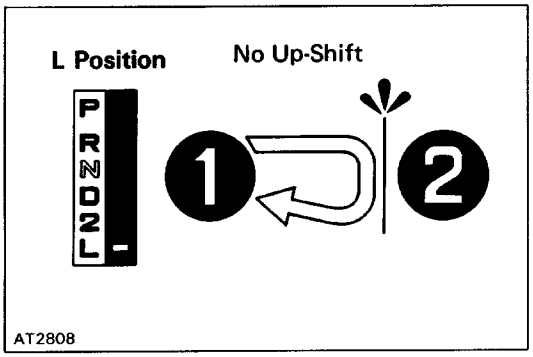

3. L POSITION TEST

(a) While running in the L position, check to see that there is no up–shift to 2nd gear.

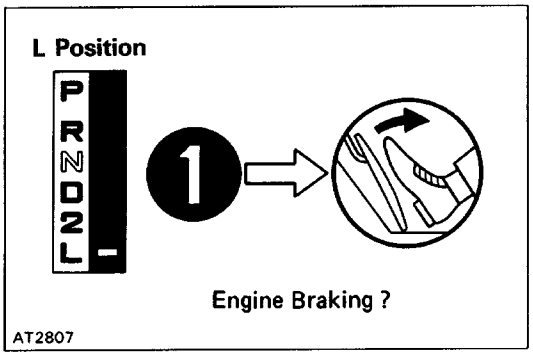

(b) While running in the L position, release the accelerator pedal and check the engine braking effect.

EVALUATION

If there is no engine braking effect**:**

- First and reverse brake is defective

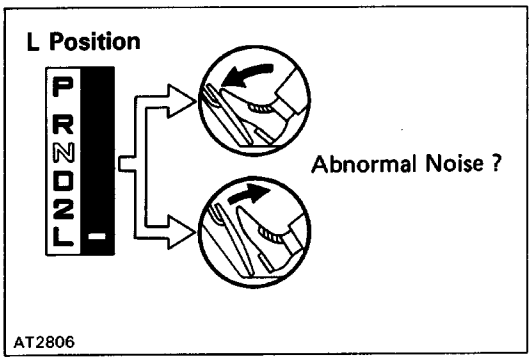

(c) Check for abnormal noise during acceleration and deceleration.

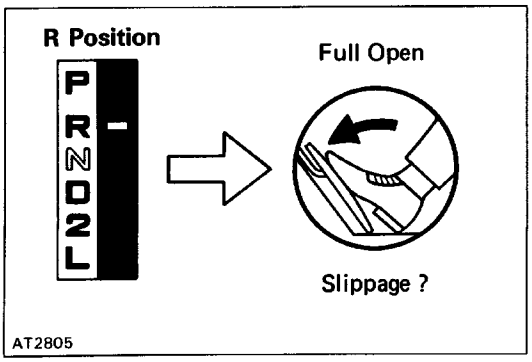

4. R POSITION TEST

Shift into the R position and, while starting at wide open throttle, check for slipping.

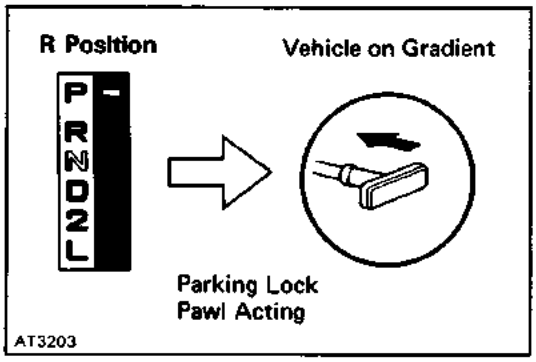

5. P POSITION TEST

Stop the vehicle on a gradient (more than 5°) and after shifting into the P position, release the parking brake. Then check to see that the parking lock pawl holds the vehicle in place.

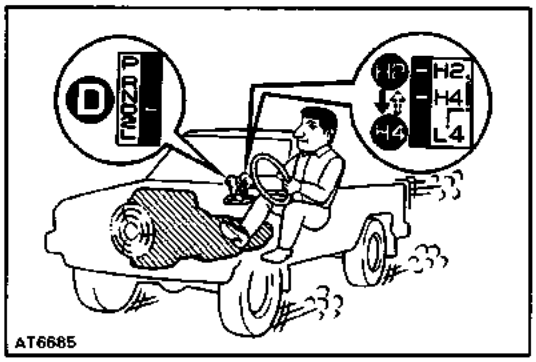

6. TRANSFER TEST

(a) When the shift lever is shifted from the H2 to H4, confirm that the vehicle changes from 2 to 4 wheel drive. If it does not, the transfer is faulty.

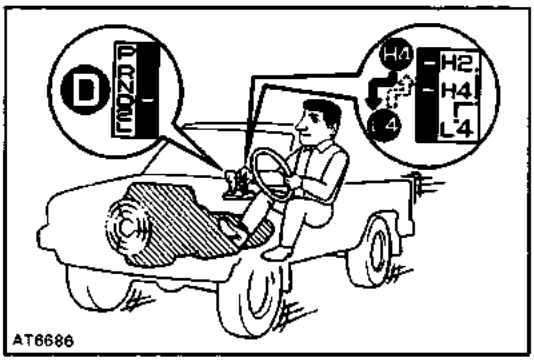

(b) When the transfer lever is shifted from H4 to L4, confirm that the gear changes according to the shifted diagram (See page **AT–141**). If it does not, the No.4 solenoid, ECM or transfer faulty.

Automatic Shift Schedule

Transfer shift position "H2" or.."H4"		Throttle valve fully open ( ] Fully closed						km/h (mph)	
		1→2	2→3	3→O/D	[3→O/D]	[O/D→3]	O/D→3	3→2	2→1
D position	NORM	50–53 (31–33)	90–96 (56–60)	131–138 (81–86)	35–39 (22–24)	21–25 (13–16)	125–132 (78–82)	84–91 (52–57)	40–44 (25–27)
	PW R	50–53 (31–33)	90–96 (56–60)	131–138 (81–86)	38–42 (24–26)	21–25 (13–16)	125–132 (78–82)	84–91 (52–57)	40–44 (25–27)
2 position	NORM PWR	43–46 (27–29)	103–109 (64–68)	–	–	–	–	97–103 (60–64)	38–42 (24–42)
L position	NORM PWR	–	–	–	–	–	–	82–89 (51–55)	47–51 (29–32)

Transfer shift position "H2" or "H4"		Throttle valve opening 5%					km/h (mph)
		Lock–up ON			Lock–up OFF		
		2nd	*3rd	O/D	2nd	*3rd	O/D
D position	NORM	–	52 – 56 (32 – 35)	64 – 68 (40 – 42)	–	50 – 53 (31 – 33)	55 – 59 (34 – 37)
	PW R	–	52 – 56 (32 – 35)	64 – 68 (40 – 42)	–	50 – 53 (31 – 33)	55 – 59 (34 – 37)

* : O/D switch OFF

HINT:

(1) Lock–up will not occur–in 2nd gear unless the throttle valve opening is greater than 50%.

(2) There is no lock–up in the 2 and L positions.

(3) In the following cases, the lock–up will be released regardless of the lock–up pattern.

- When the throttle is completely closed.
- When the brake light switch is ON.

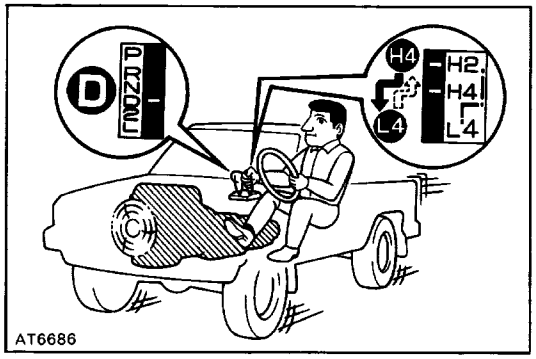

TRANSFER HIGH–LOW SHIFT RANGE

The A340H transfer differs from previous manual transfer in that high–low shifting is possible while the vehicle is in motion, though it is not possible at all vehicle speeds or throttle opening angles. The shifting possibility ranges for high–low shifting have been adopted with the idea of improving shifting performance and transfer conditions, and preventing engine overrun.

The shifting possibility ranges are controlled by ECM and when a high–low shift change is made within these ranges the ECM operates the No.4 solenoid which carries out the high–low transfer shift. However, if a transfer is attempted outside the shifting possibility range, the high–low shift will not take place until the vehicle speed and throttle opening angle come within the appropriate range. The high–low shifting possibility ranges are shown in the diagrams below.

There are three shifting possibility ranges for when the transmission gear is in first, second or third gear, which combine with the respective transmission shift positions (L, 2, D).

Although the high–) low shift takes place in the 1st gear, 2nd gear and 3rd gear shifting positions with the gears in 1st gear, 2nd gear and 3rd gear respectively, when a high–low shift change is made in 1st gear while in the 2nd gear shifting possibility range only after the transmission has shifted up into second gear does the high–low shift take place. In the 2 position and D position high–low shifting possibility ranges where the 1st and 2nd positions overlap, the high–low shift will take place in first gear if the transmission is in first gear, or in second gear if the transmission is in second gear.

L Position: High–Low Shift Possibility Range

* : This transfer shift is only possible when the I D L contact points of the throttle position sensor are ON.

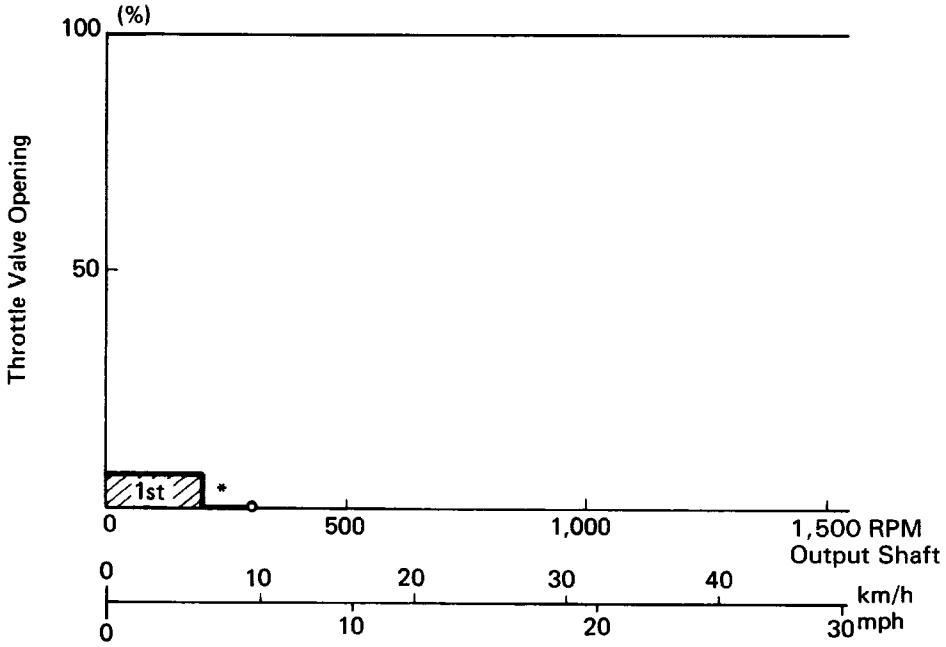

AT4662

2 Position: High–Low Shift Possibility Range

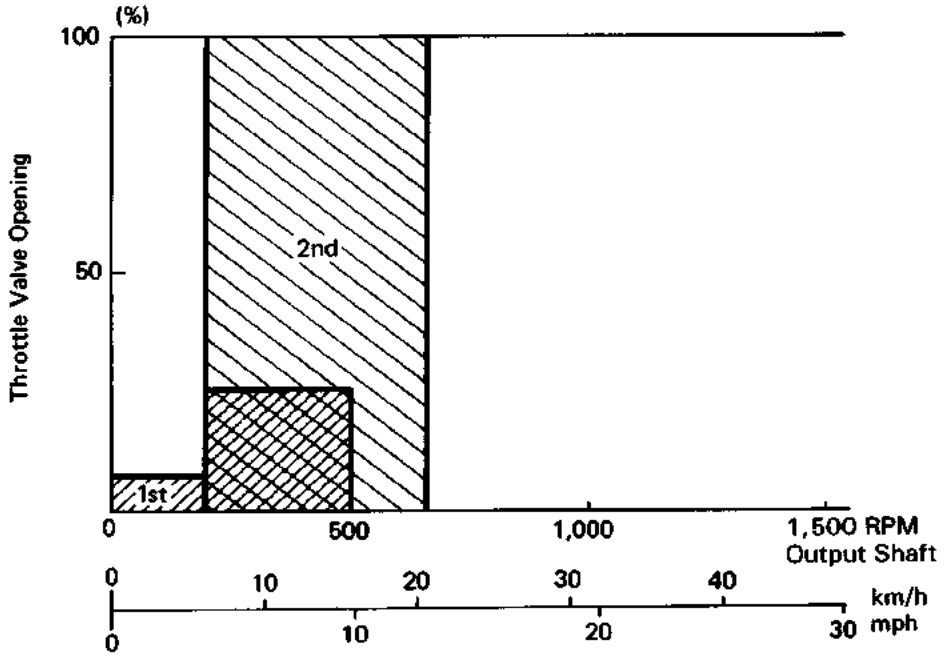

AT4663

D Position: High–Low Shift Possibility Range

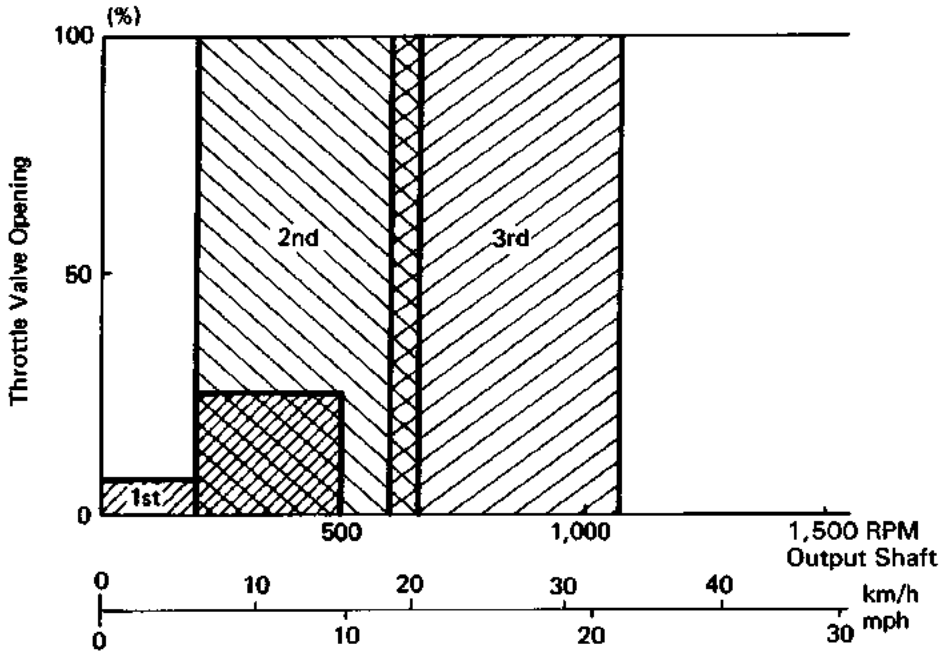

AT4664

Low–High Shift Possibility Range (L, 2, D Position)

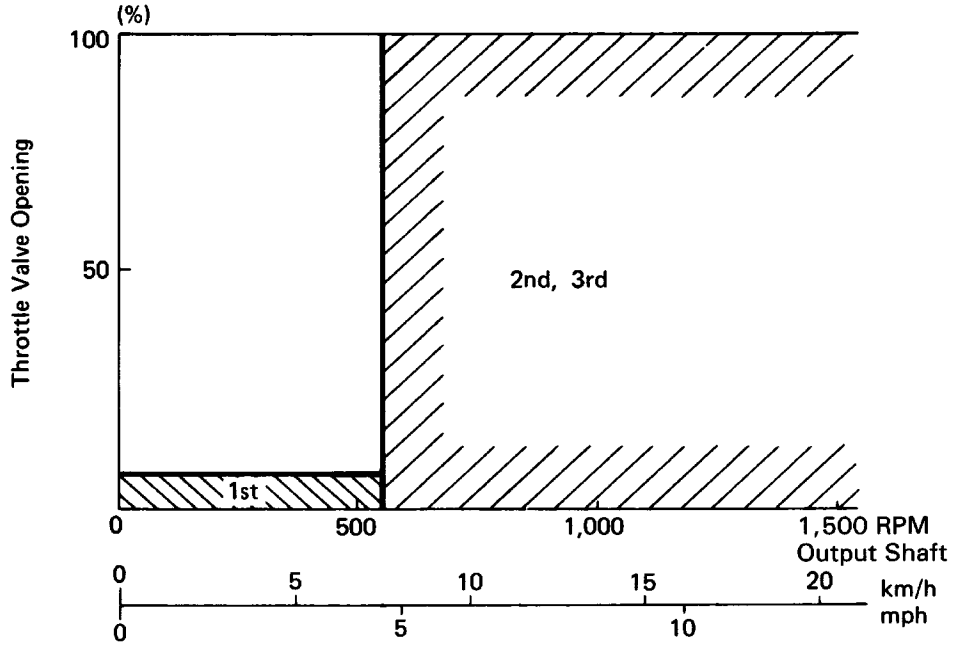

AT4665

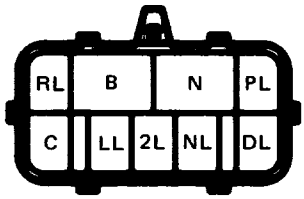

SH-9-2-A

Park/Neutral Position Switch

INSPECTION OF PARK/NEUTRAL POSITION SWITCH

Inspect that there is continuity between each terminals.

Shift Position \ Terminal	B	N	PL	RL	NL	DL	2L	LL	C
P	○	○	○						○
R				○					○
N	○	○			○				○
D						○			○
2							○		○
L								○	○

Low–High Shift Possibility Range (L, 2, D Position)

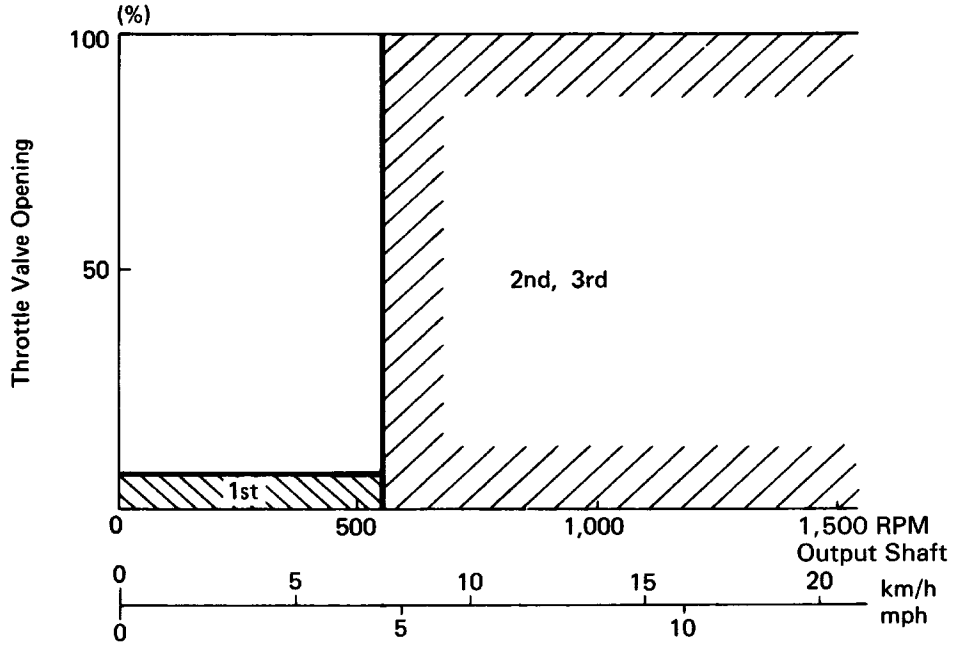

AT4665

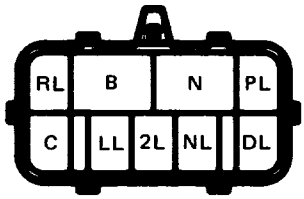

SH-9-2-A

Park Neutral Position Switch

INSPECTION OF PARK/NEUTRAL POSITION SWITCH

Inspect that there is continuity between each terminals.

Shift Position \ Terminal	B	N	PL	RL	NL	DL	2L	LL	C
P	○	○	○						○
R				○					○
N	○	○			○				○
D						○			○
2							○		○
L								○	○

ON–VEHICLE REPAIR

Transmission Valve Body

REMOVAL OF VALVE BODY AND/OR SOLENOID VALVE

1. CLEAN TRANSMISSION EXTERIOR

To prevent contamination, clean the exterior of the trans–mission.

2. DRAIN TRANSMISSION FLUID

Remove the drain plug and drain the fluid into a suitable container.

3. REMOVE FRONT STABILIZER BAR

(See page SA–123)

4. REMOVE FRONT PROPELLER SHAFT

(See page PR–4)

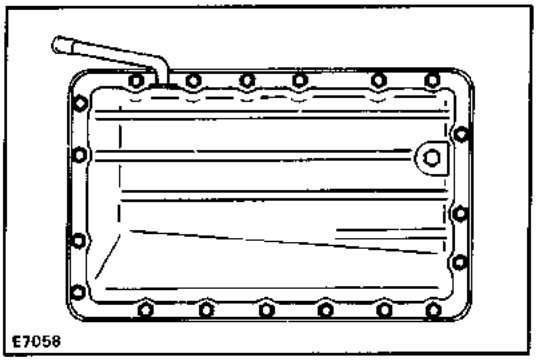

5. REMOVE TRANSMISSION OIL PAN

(a) Remove the nineteen bolts.

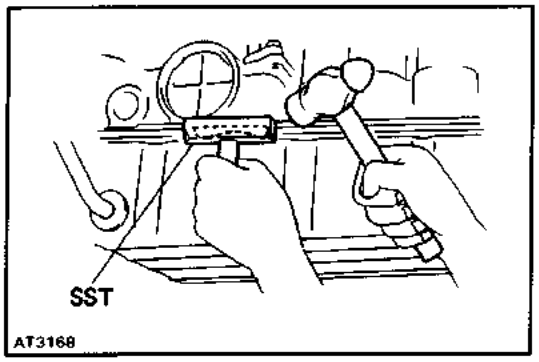

(b) Install the blade of SST between the transmission case and oil pan, cut off applied sealer.
SST 09032–00100

NOTICE: Be careful not to damage the oil pan flange.

(c) Remove pan by lifting the transmission case.

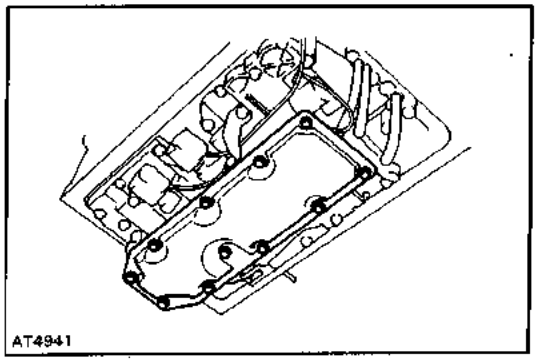

6. REMOVE OIL STRAINER AND GASKETS

(a) Remove the eleven bolts holding the oil strainer to the oil strainer case.

(b) Remove the oil strainer and gasket.

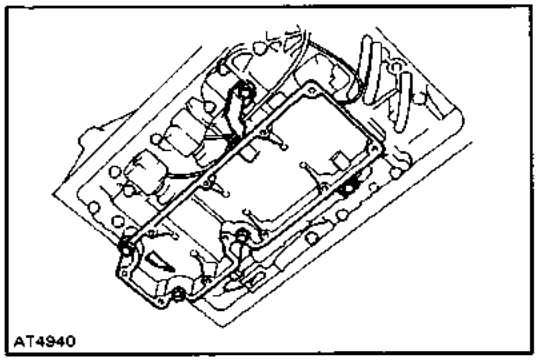

(c) Remove the five bolts and oil strainer case.
(d) Remove the two gaskets from the case.

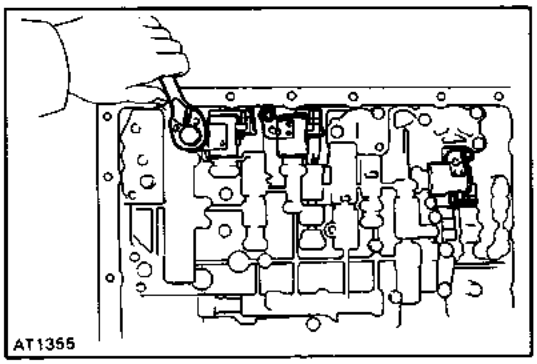

7. WHEN REPLACING SOLENOIDS

(a) Disconnect the connectors from the solenoids.
(b) Remove the solenoid mounting bolts.
(c) Remove the solenoids.

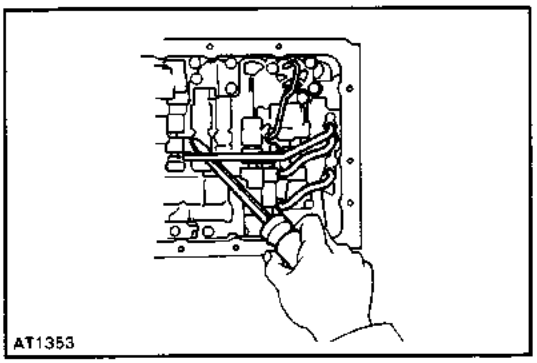

8. REMOVE OIL TUBES

Pry up both tube ends with a large screwdriver and re–move the three tubes.

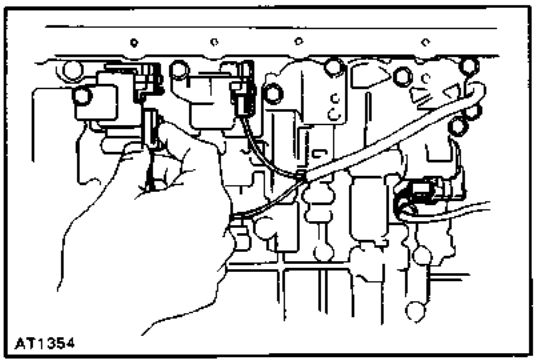

9. DISCONNECT SOLENOID CONNECTORS

Disconnect the three connectors from No.1, No. 2 and lock–up solenoids.

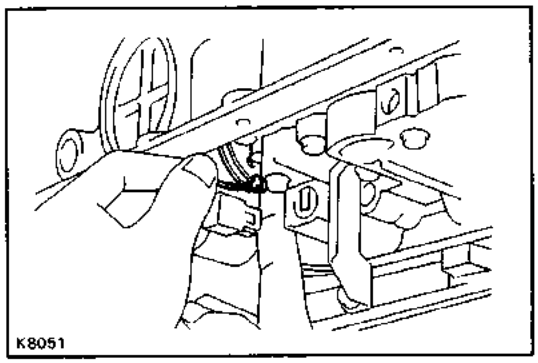

10. REMOVE VALVE BODY

(a) Disconnect the throttle cable from the cam.

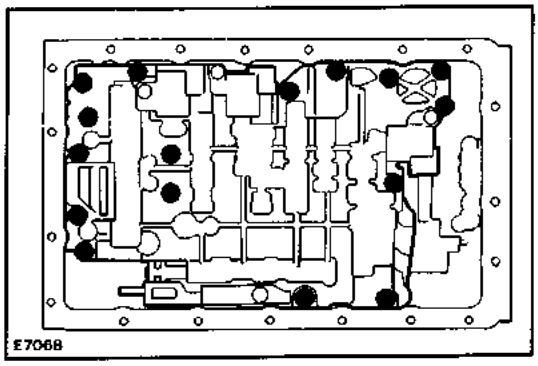

(b) Remove the sixteen bolts.

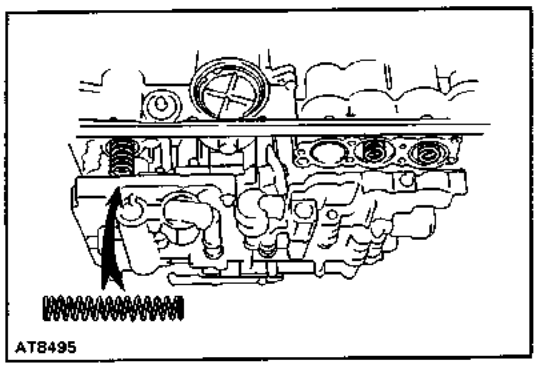

(c) Remove the two Co accumulator piston springs.
(d) Remove the valve body.

HINT: Be careful not to drop the check ball body and spring.

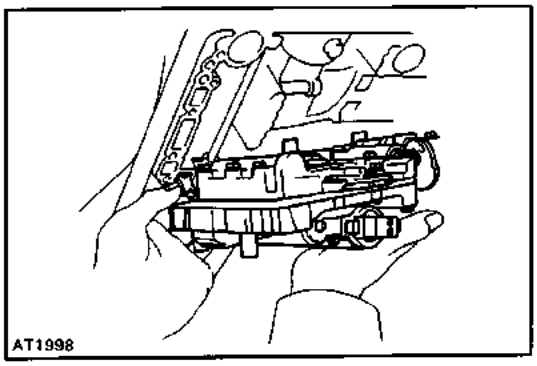

INSTALLATION OF VALVE BODY AND/OR SOLENOID VALVE

1. INSTALL VALVE BODY

(a) Install the valve body together the check ball body and spring.

HINT: Align the groove of the manual valve to the pin of the lever.

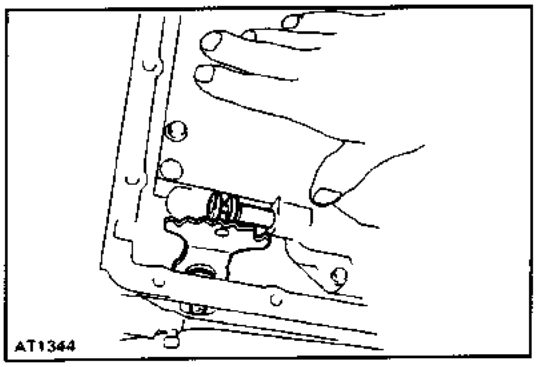

(b) Align the groove of the manual valve to the pin of the lever.

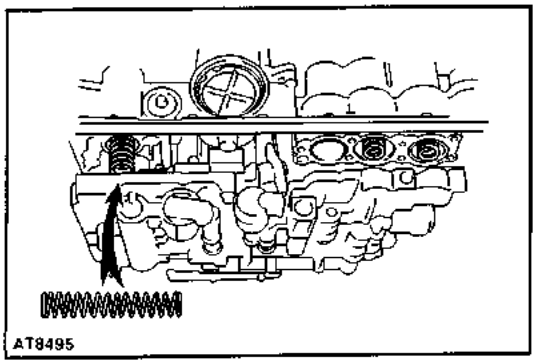

(c) Install the two Co accumulator piston springs.

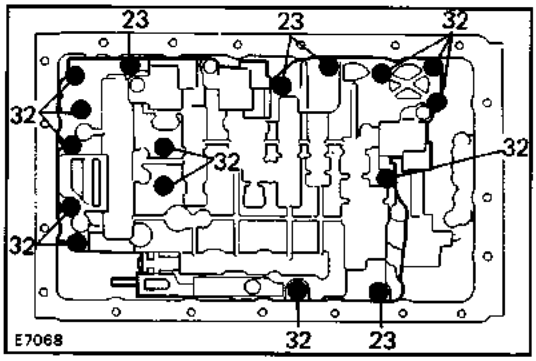

(d) Install the sixteen bolts.

HINT: Each bolt length (mm) is indicated in the figure.

Torque: 10 N–m 0 00 kgf–cm, 7 ft–lbf)

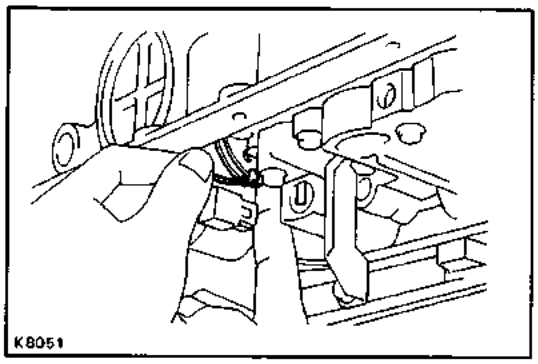

(e) Connect the throttle cable to the cam.

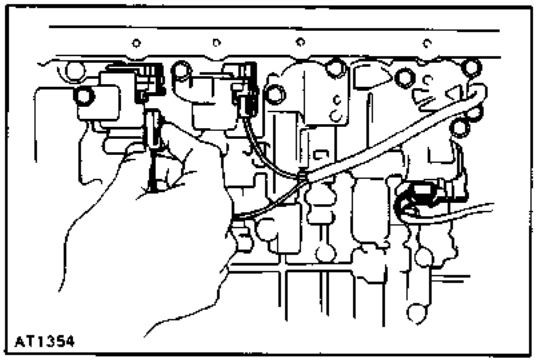

2. CONNECT CONNECTORS TO EACH SOLENOID

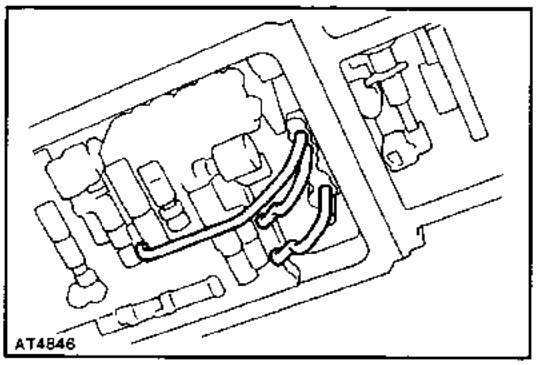

3. INSTALL OIL TUBES

Using a plastic hammer, install the three tubes into posi–tion shown in the figure.

NOTICE: Be careful not to bend or damage the tubes.

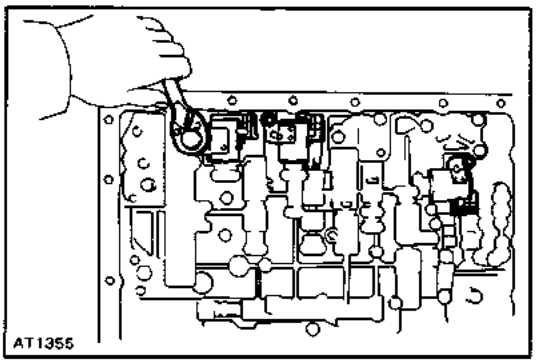

4. WHEN REPLACING SOLENOID

(a) Install a new 0–ring to the solenoid.
(b) Install the solenoid and torque the bolt.

Torque: 10 N–m (100 kgf–cm, 7 ft–lbf)

(c) Connect the connector to the solenoid.
(d) Clamp the solenoid wire.

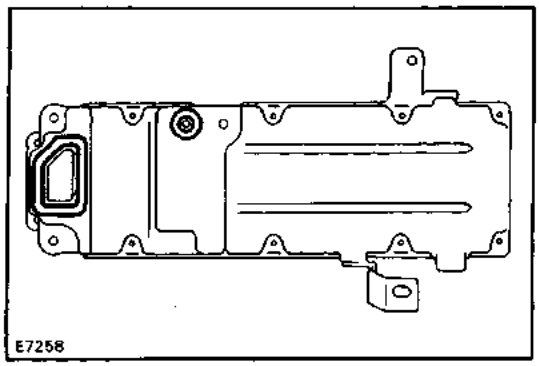

5. INSTALL OIL STRAINER AND GASKETS

(a) Install two new gaskets to the oil strainer case.

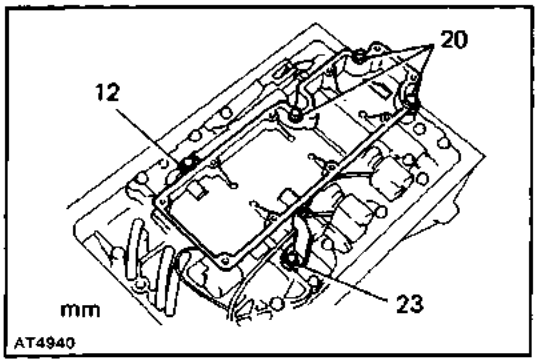

(b) Install the oil strainer case and torque the five bolts.

Torque: 10 N–m (100 kgf–cm, 7 ft–lbf)

HINT: Each bolt length (mm) is indicated in the figure.

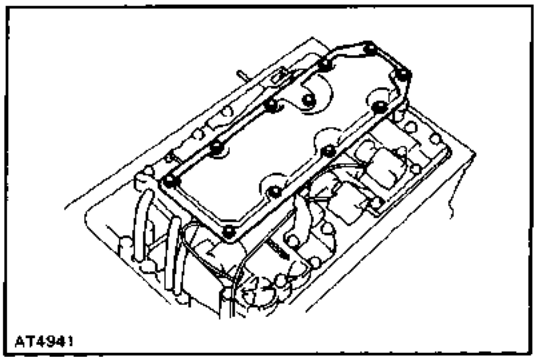

(c) Install a new gasket to the oil strainer case.

(d) Install the oil strainer and torque the eleven bolts.

Torque: 6.9 N–m (70 kgf–cm, 61 in.–lbf)

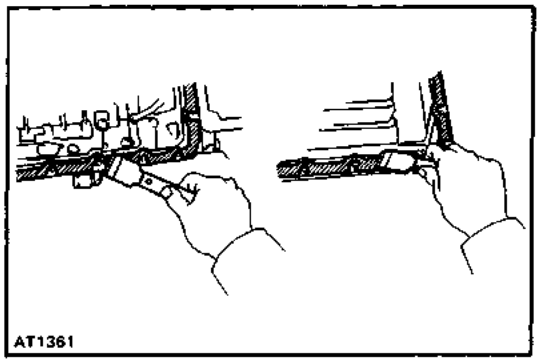

6. INSTALL OIL PAN

(a) Remove any packing material and be careful not to drop the oil on the contacting surfaces of the oil pan and transmission case.

(b) Clean contacting surfaces of any residual packing material using gasoline or alcohol.

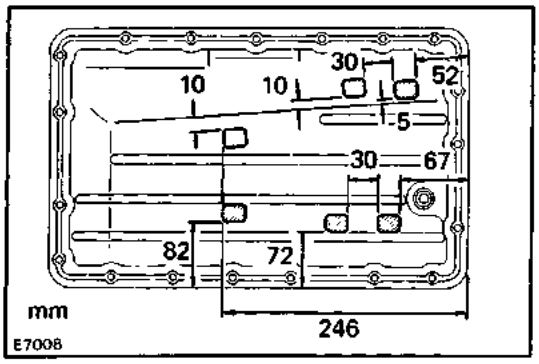

(c) Install the six magnets as shown in the figure.

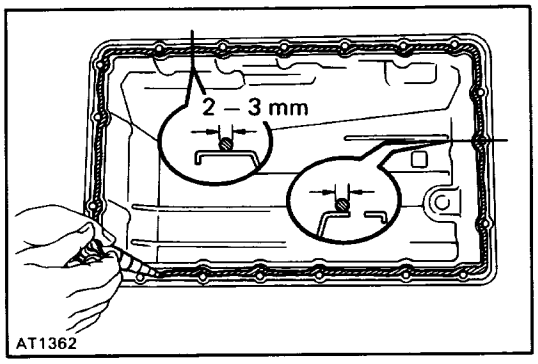

(d) Apply seal packing to the oil pan as shown in the figure.
Seal packing: Part No. 08826–00090, THREE BOND
1281 or equivalent

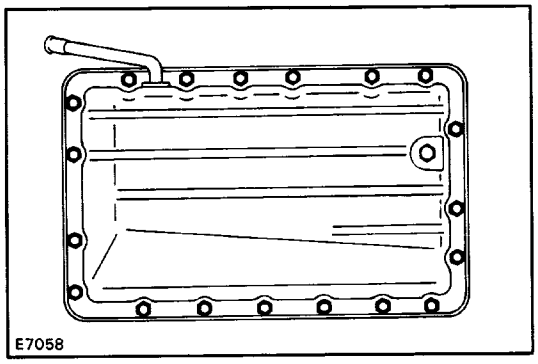

(e) Install and torque the nineteen bolts.

Torque: 7.4 N–m (75 kgf–cm, 61 in.¿lbf)

7. INSTALL OIL PAN DRAIN PLUG

Torque the drain plug.
Torque: 20 N–m (205 kgf–cm, 15 ft–lbf)

8. INSTALL FRONT PROPELLER SHAFT
(See page PR–4)
9. INSTALL FRONT STABILIZER BAR
(See page SA–123)

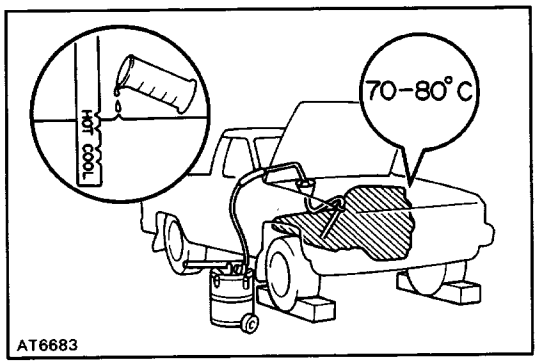

10. FILL TRANSMISSION WITH ATF
(See page AT–1 14)

NOTICE: Do not overfill.
Fluid type: ATF DEXRONO® II

11. CHECK FLUID LEVEL

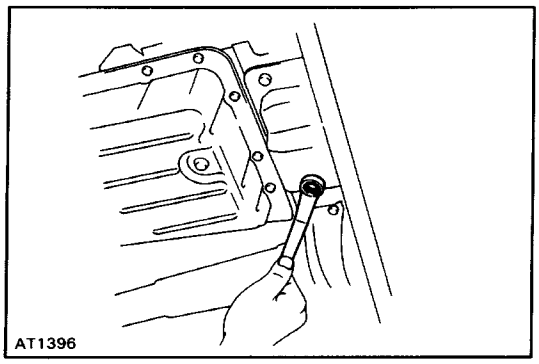

Transfer Valve Body
REMOVAL OF VALVE BODY AND/OR SOLENOID

VALVE

1. CLEAN TRANSFER EXTERIOR

To prevent contamination, clean the exterior of the trans–fer.

2. DRAIN TRANSFER CASE FLUID

Remove the drain plug and drain fluid into a suitable con–tainer.

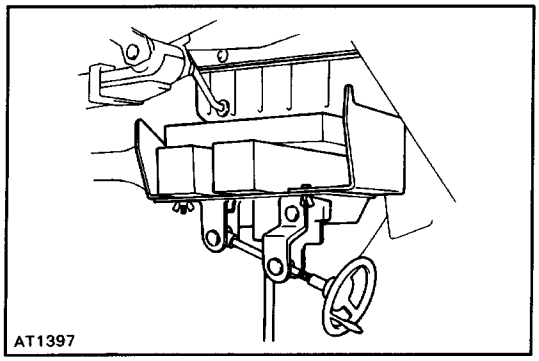

3. SUPPORT TRANSMISSION

Using a transmission jack, support the transmission.

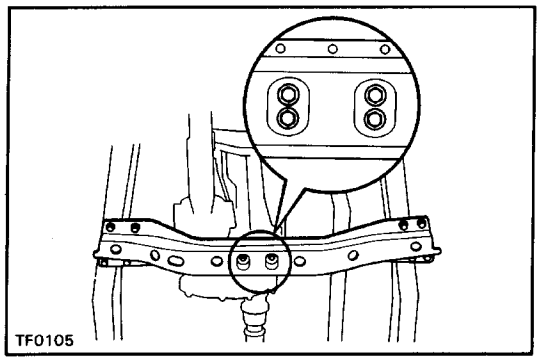

4. REMOVE REAR SUPPORT MEMBER FROM SIDE FRAME

(a) Remove the four bolts from the engine rear mount–ing.

(b) Raise the transmission slightly with a jack.

(c) Remove the eight bolts from the side frame and re–move the rear support member.

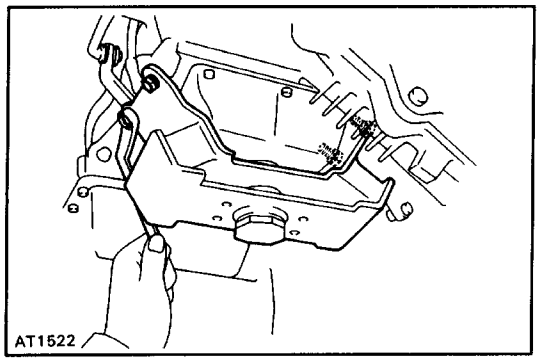

5. REMOVE MEMBER BRACKET FROM TRANSFER

Remove the four bolts and member bracket from the transfer.

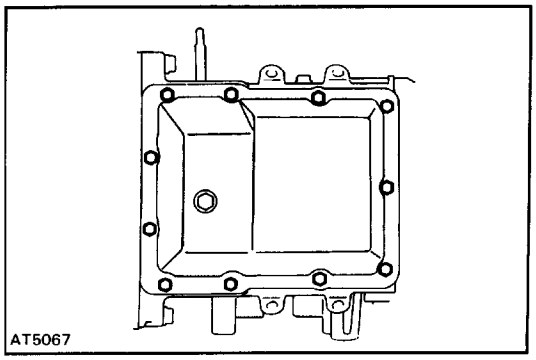

6. REMOVE TRANSFER OIL PAN

(a) Remove the eleven bolts.

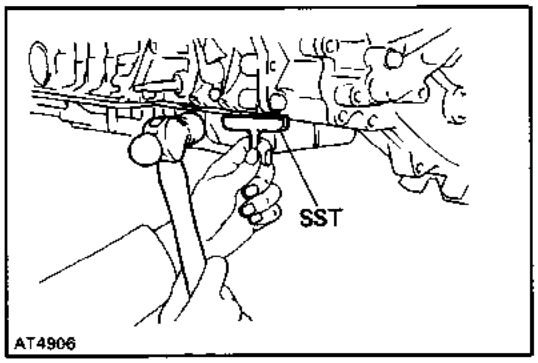

(b) Install the blade of SST between the transfer case and oil pan, cut off applied sealer.
SST 09032–00100

NOTICE: Be careful not to damage the oil pan flange.

(c) Remove the transfer oil pan.

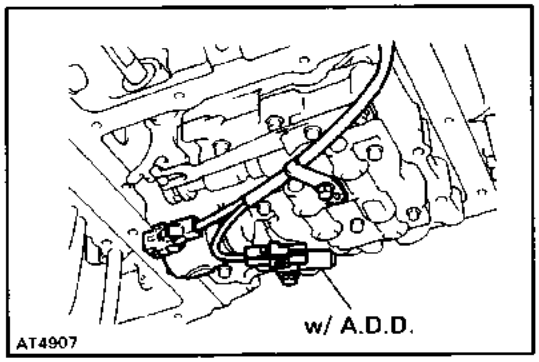

7. DISCONNECT SOLENOID CONNECTOR

Disconnect the connectors from No.4 solenoid and transfer pressure switch.

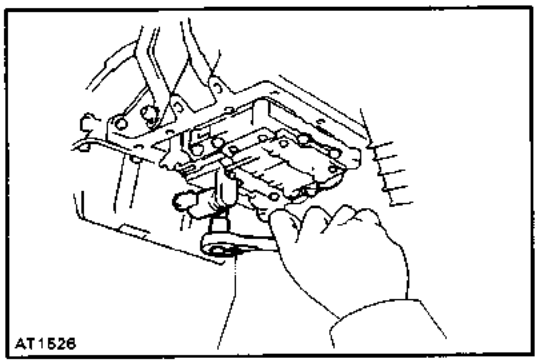

8. WHEN REPLACING SOLENOID

(a) Remove the solenoid mounting bolt.
(b) Remove the solenoid.

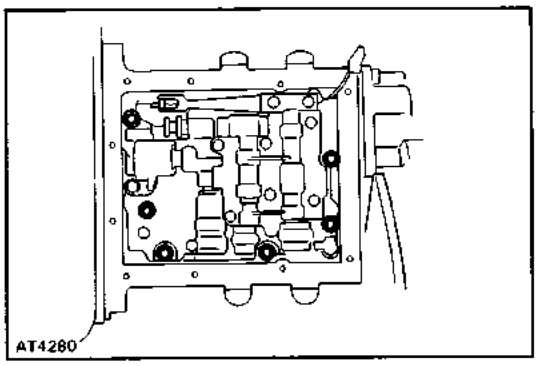

9. REMOVE VALVE BODY

Remove the six bolts and valve body.

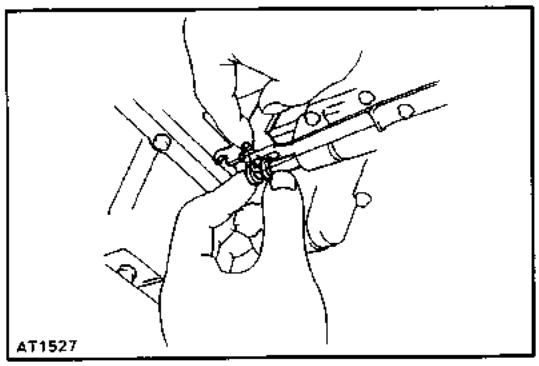

INSTALLATION OF VALVE BODY AND/OR SOLENOID VALVE

1. INSTALL VALVE BODY

(a) Align the manual valve lever with the manual valve.

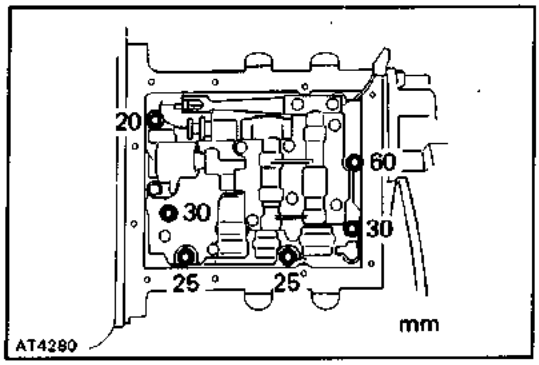

(b) Install the bolts as shown. Torque the bolts evenly.

Torque: 10 N–m (100 kgf–cm, 7 ft–lbf)

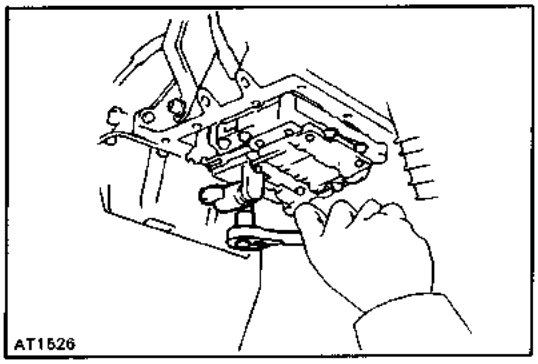

2. WHEN REPLACING SOLENOID

Install the solenoid and torque the bolt.

Torque: 10 N–m (100 kgf–cm, 7 ft–lbf)

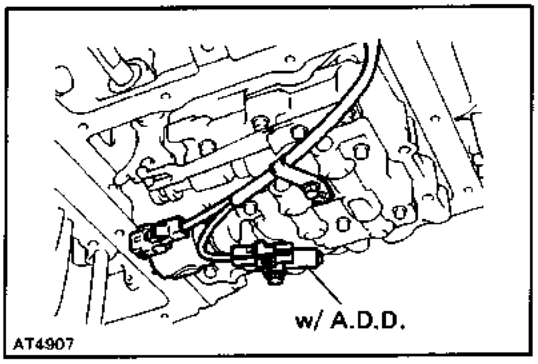

3. CONNECT CONNECTOR TO SOLENOID

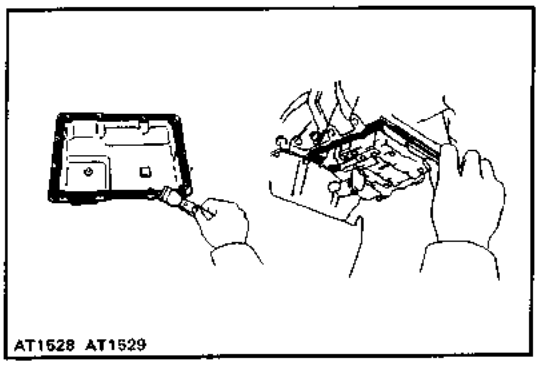

4. INSTALL TRANSFER OIL PAN

(a) Remove any packing material and be careful not to drop the oil on the contacting surfaces of the oil pan and transfer case.

(b) Clean contacting surfaces of any residual packing material, using gasoline or alcohol.

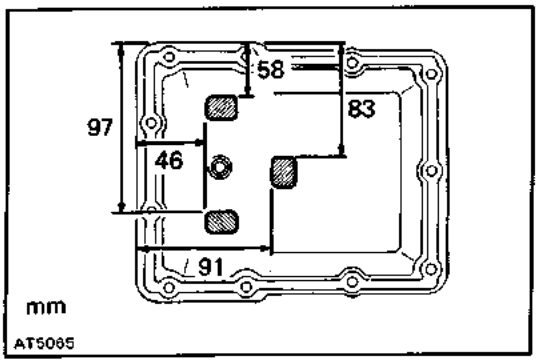

(c) Install the three magnets as shown in the figure.

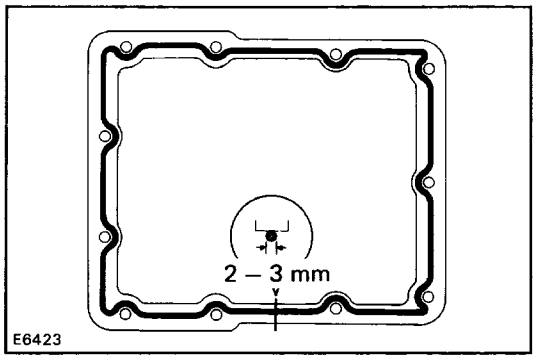

(d) Apply seal packing to the oil pan as shown in the figure.

Seal packing: Part No. 08826–00090, THREE BOND 1281 or equivalent

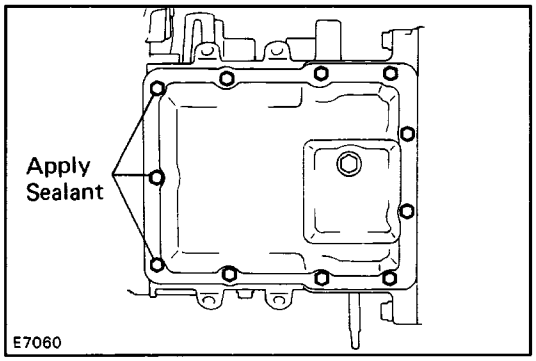

(e) Apply sealant to the threads of the three bolts.

Sealant: Part No. 08833–00070, THREE BOND 1324 or equivalent

(f) Install the oil pan and torque the eleven bolts.

Torque: 7.4 N–m (75 kgf–cm, 65 in.–lbf)

5. INSTALL DRAIN PLUG

Torque the drain plug

Torque: 20 N–m (205 kgf–cm, 15 ft–lbf)

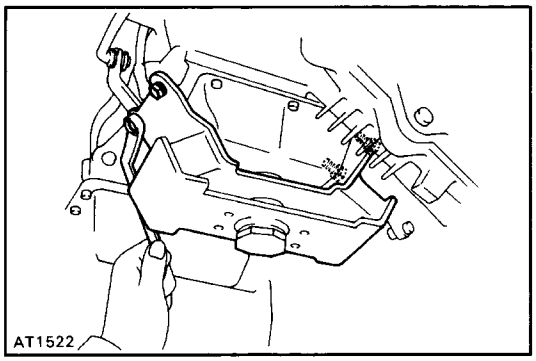

6. INSTALL MEMBER BRACKET TO TRANSFER

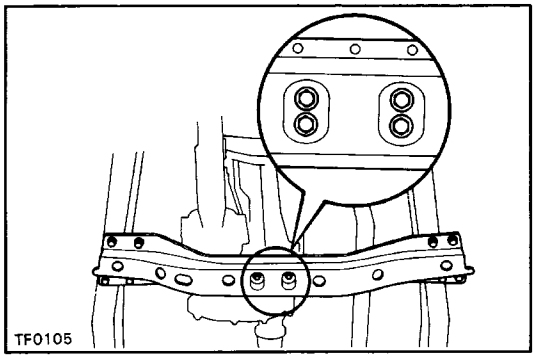

7. INSTALL REAR SUPPORT MEMBER

(a) Raise the transmission slightly with a jack.

(b) Install the rear support member to the side frame with the bolts. Torque the bolts.

Torque: 95 N–m (970 kgf–cm, 70 ft–lbf)

(c) Lower the transmission and transfer.

(d) Install the four mounting bolts to the engine rear mounting. Torque the bolts.

Torque: 13 N–m (130 kgf–cm, 9 ft–lbf)

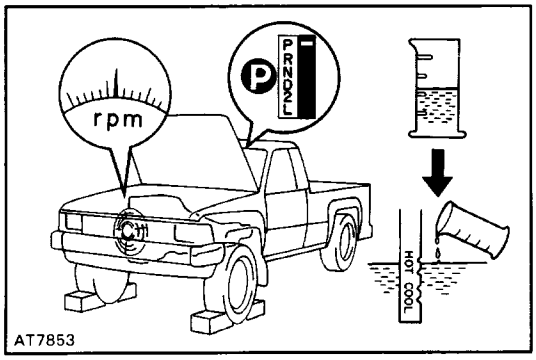

8. REMOVE TRANSMISSION JACK

9. FILL TRANSMISSION WITH ATF

(See page AT–115)

NOTICE: Do not overfill.

Fluid type: ATF DEXRON®II

10. CHECK FLUID LEVEL

Throttle Cable

REMOVAL OF THROTTLE CABLE

1. DISCONNECT THROTTLE CABLE FROM THROTTLE LINKAGE

2. DRAIN TRANSMISSION FLUID

Remove the drain plug and drain the fluid into a suitable container.

3. REMOVE FRONT STABILIZER BAR

(See page SA–123)

4. REMOVE FRONT PROPELLER SHAFT

(See page PR–4)

5. REMOVE TRANSMISSION OIL PAN

(a) Remove the nineteen bolts.

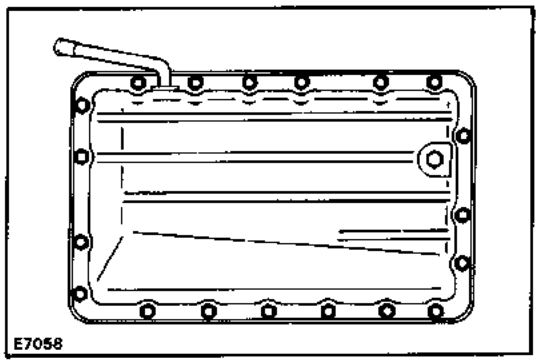

1bf Insert the blade of SST between the transmission case and oil pan, cut off applied sealer.
SST 09032–00100

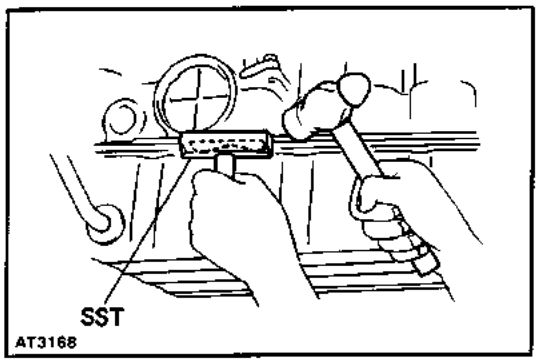

NOTICE: Be careful not to damage the oil pan flange.

(c) Remove pan by lifting the transmission case.

6. DISCONNECT SOLENOID CONNECTOR

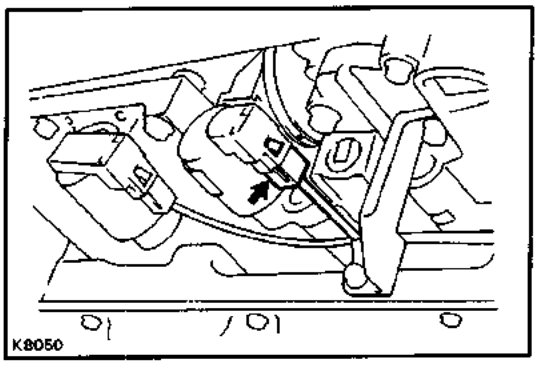

7. DISCONNECT THROTTLE CABLE FROM VALVE BODY

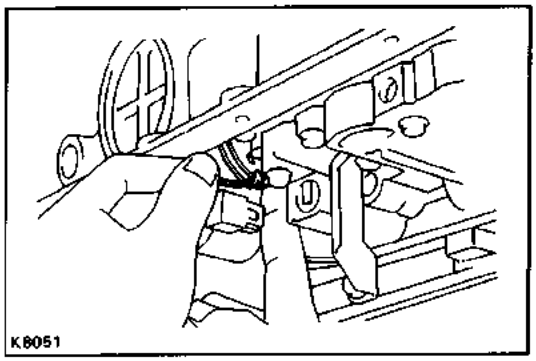

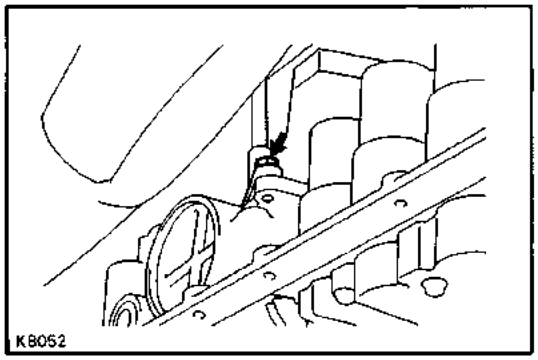

8. REMOVE THROTTLE CABLE

Remove the bolt and pull out the cable from the transmis–sion case.

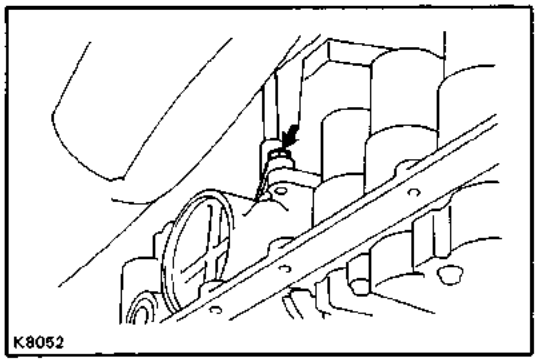

INSTALLATION OF THROTTLE CABLE

1. INSTALL CABLE INTO TRANSMISSION CASE

(a) Be sure to push it in all the way.
(b) Install the bolt.

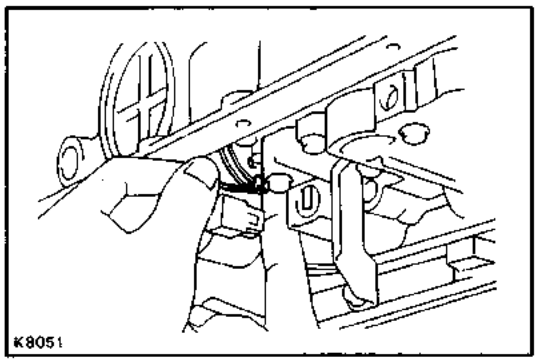

2. CONNECT THROTTLE CABLE TO VALVE BODY

Connect throttle cable to the cam.

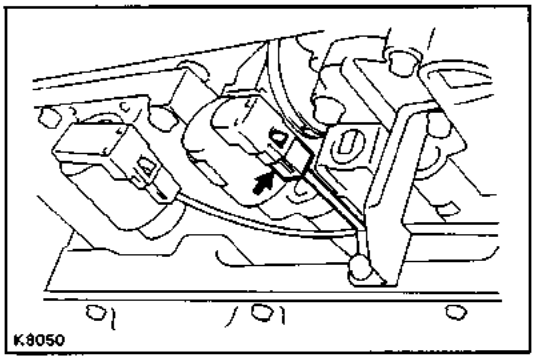

3. CONNECT SOLENOID CONNECTOR

4. INSTALL OIL PAN AND OIL PAN DRAIN PLUG

(See pages AT–150 and AT–151)

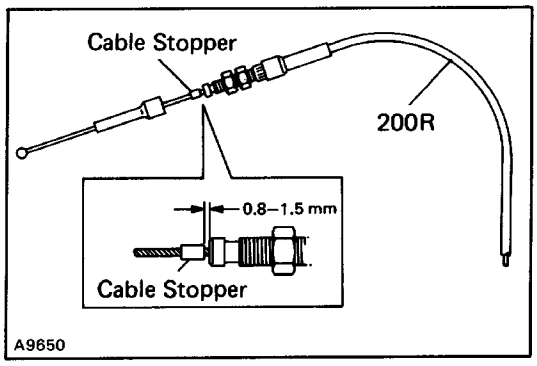

5. IF THROTTLE CABLE IS NEW, STAKE STOPPER ON INNER CABLE

HINT: New cable do not have a cable stopper staked.

(a) Bend the cable so there is a radius of about 200 mm (7.87 in.).

(b) Pull the inner cable lightly until a slight resistance is felt, and hold it.

(c) Stake the stopper, 0.8–1.5 mm (0.031–0.059 in.) from the end of outer cable.

6. INSTALL FRONT PROPELLER SHAFT
(See page PR–4)

7. INSTALL FRONT STABILIZER BAR
(See page SA–123)

8. CONNECT THROTTLE CABLE TO THROTTLE LINKAGE

9. ADJUST THROTTLE CABLE
(See page AT–116)

10. FILL TRANSMISSION WITH ATF
(See page AT–115)

NOTICE: Do not overfill.
Fluid type: ATF DEXRON® II

11. CHECK FLUID LEVEL

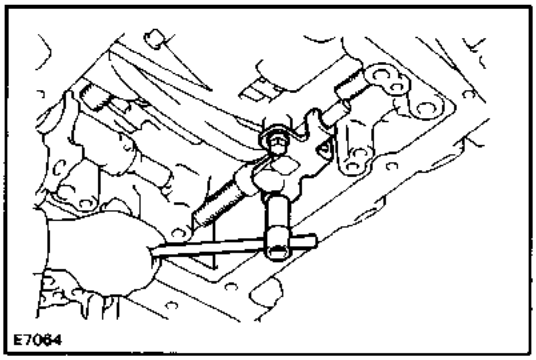

Parking Lock Pawl

REMOVAL OF PARKING LOCK PAWL

1. REMOVE TRANSFER VALVE BODY

(See page AT–151**)**

2. REMOVE PARKING LOCK PAWL BRACKET

Remove the two bolts and bracket.

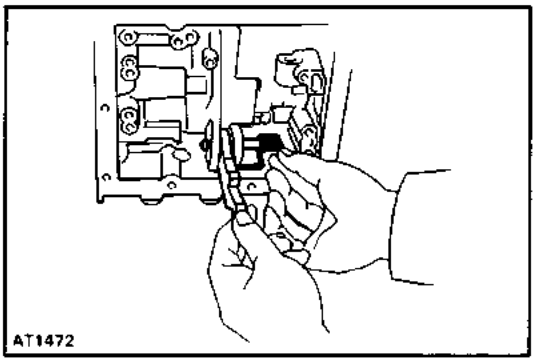

3. REMOVE SPRING, SHAFT AND PARKING LOCK PAWL

Remove the spring, shaft and parking lock pawl.

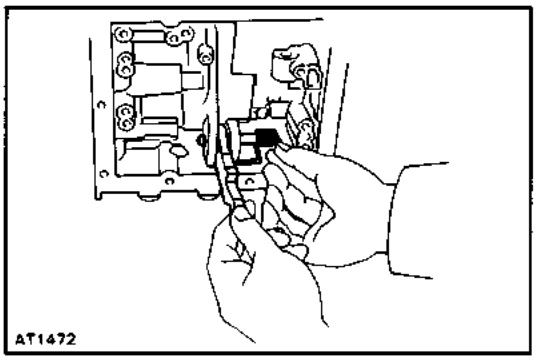

INSTALLATION OF PARKING LOCK PAWL

1. INSTALL PARKING LOCK PAWL, SHAFT AND SPRING

Install the parking lock pawl, shaft and spring.

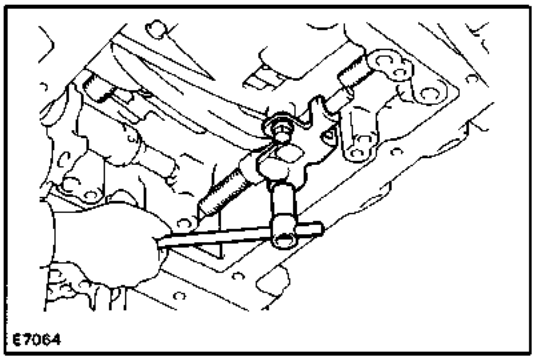

2. INSTALL PARKING LOCK PAWL BRACKET

(a) Install two bolts finger tight.

(b) Check that the parking lock pawl operates smoothly.

(c) Torque the bolts.

Torque: 6.9 N–m (70 kgf–cm, 61 in.¿lbf)

3. INSTALL TRANSFER VALVE BODY

(See page AT–152**)**

REMOVAL AND INSTALLATION OF TRANSMISSION

Remove and install the parts as shown.

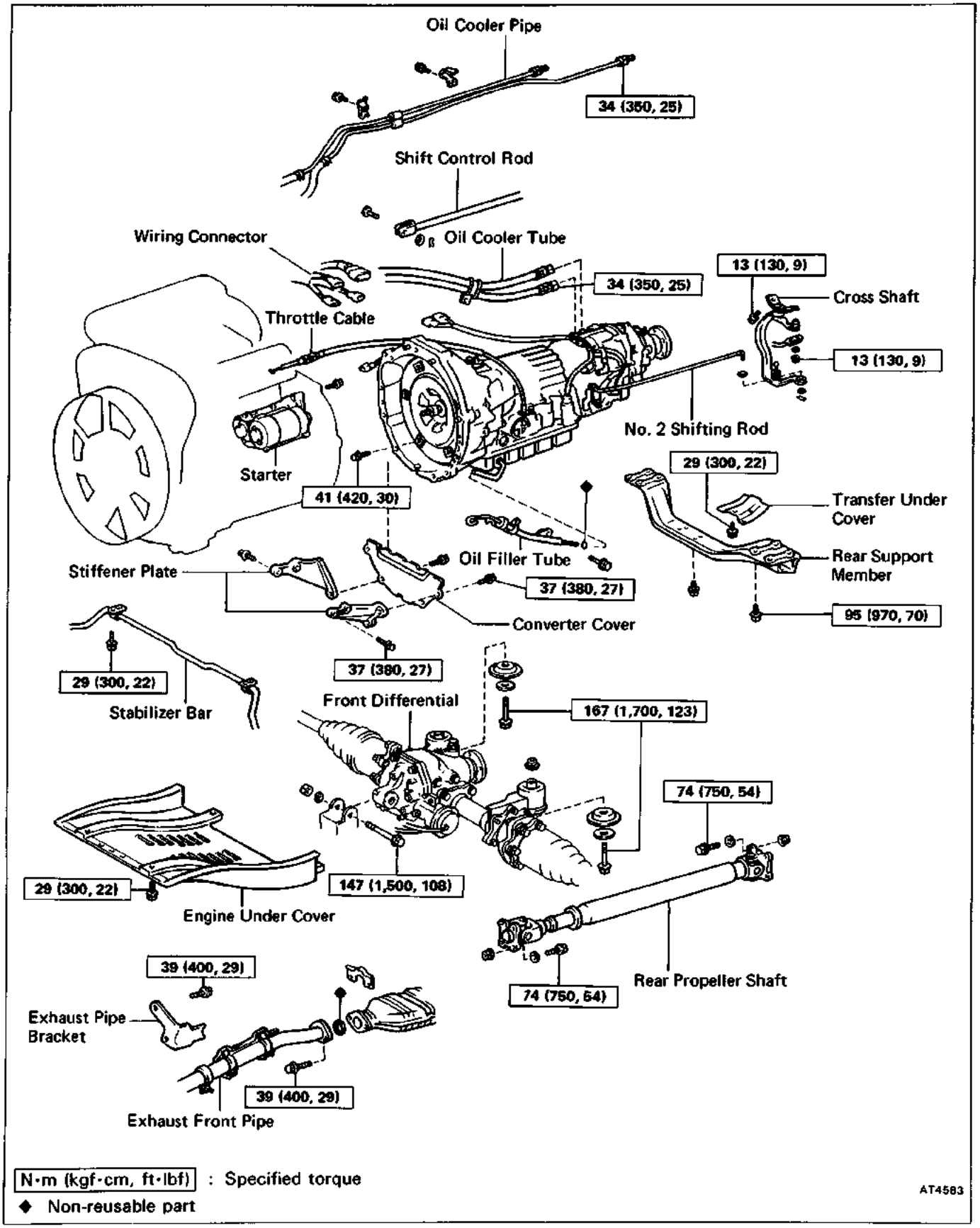

(Cont'd)

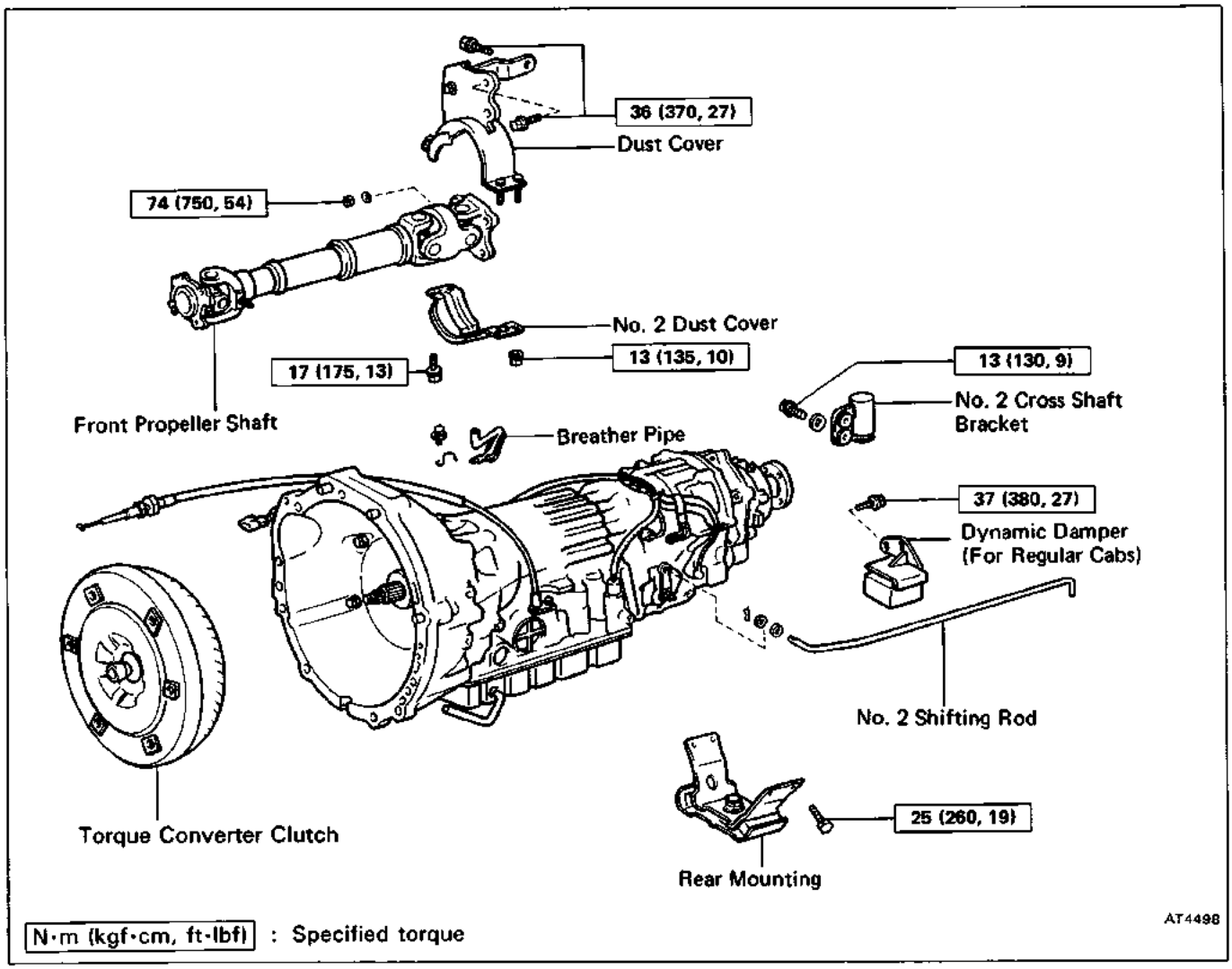

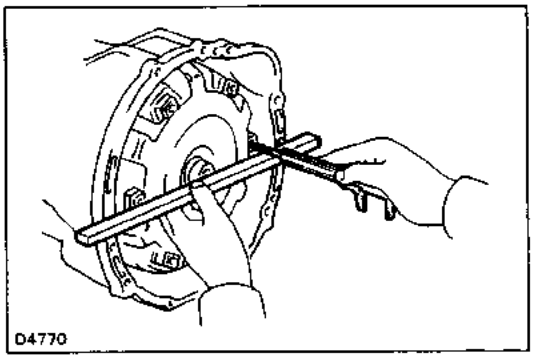

(MAIN POINT OF INSTALLATION)

1. CHECK TORQUE CONVERTER CLUTCH INSTALLATION

Using calipers and a straight edge, measure from the installed surface of the torque converter clutch to the front surface of the transmission housing.

Correct distance: 18.0 mm (0.709 in.)

If the distance is less than the standard, check for an improper installation.

2. ADJUST TRANSMISSION THROTTLE CABLE

(See page AT–116)

3. FILL TRANSMISSION WITH ATF AND CHECK FLUID LEVEL

Fluid type: ATF DEXRON® II

NOTICE: Do not overfill.

TORQUE CONVERTER CLUTCH AND DRIVE PLATE

INSPECTION OF TORQUE CONVERTER CLUTCH AND DRIVE PLATE

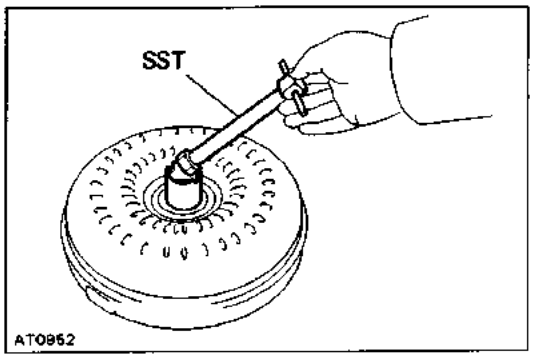

1. INSPECT ONE–WAY CLUTCH

(a) Install SST into the inner race of the one–way clutch.
SST 09350–30020 (09351–32010)

(b) Install SST so that it fits in the notch of the con–verter hub and outer race of the one–way clutch.
SST 09350–30020 (09351–32020)

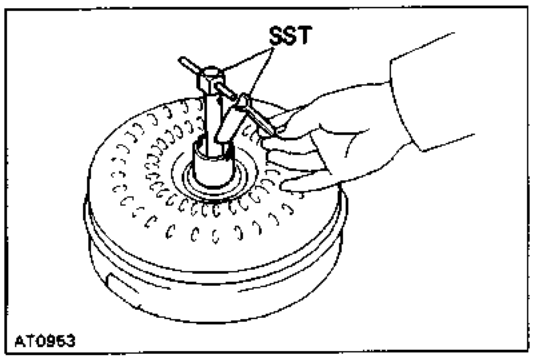

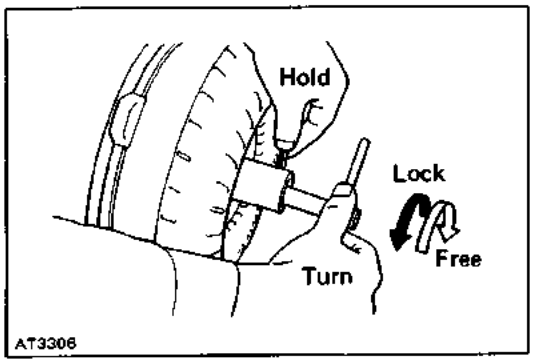

(c) With the torque converter clutch standing on its side, the clutch locks when turned counterclockwise, and
rotates freely and smoothly clockwise.
If necessary, clean the converter and retest the clutch.
Replace the converter if the clutch still fails the test.

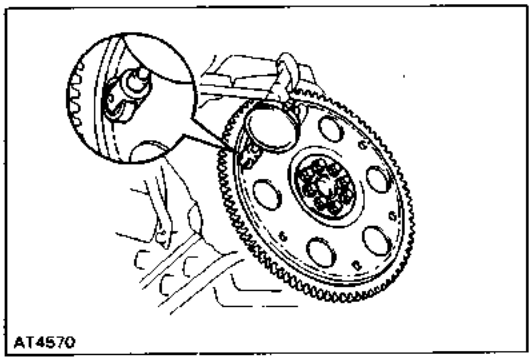

2. MEASURE DRIVE PLATE RUNOUT AND INSPECT RING GEAR

Set up a dial indicator and measure the drive plate runout.
If runout exceeds 0.20 mm (0.0079 in.) or if the ring gear is damaged, replace the drive plate. If installing a new drive plate, note the orientation of spacers and tighten the bolts.

Torque: 83 N–m (850 kgf–cm, 61 ft–lbf)

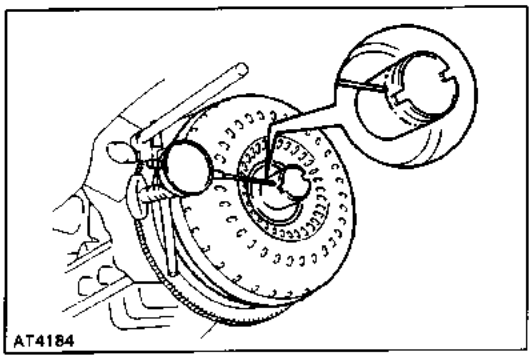

3. MEASURE TORQUE CONVERTER CLUTCH SLEEVE RUNOUT

(a) Temporarily mount the torque converter clutch to the drive plate. Set up a dial indicator.
If runout exceeds 0.30 mm (0.0118 in.), try to correct by reorienting the installation of the converter. If excessive runout cannot be corrected, replace the torque con-verter clutch.

HINT: Mark the position of the converter to ensure cor–rect installation.

(b) Remove the torque converter clutch.

MEMO

A340F Automatic Transmission

DESCRIPTION

GENERAL

The A340F automatic transmission is a four–speed automatic transmission with mechanically controlled 4WD transfer, developed with the aim of producing an easy–driving 4WD vehicle. The transmission section has fundamentally the same construction as the A340E automatic transmission mounted in the TRUCK 2WD. The operation of these is fully controlled by the ECM.

The A340F transmission is mainly composed of the torque converter clutch, the overdrive (hereafter called O/D) planetary gear unit, 3–speed planetary gear unit, the hydraulic control system and the electronic con–trol system.

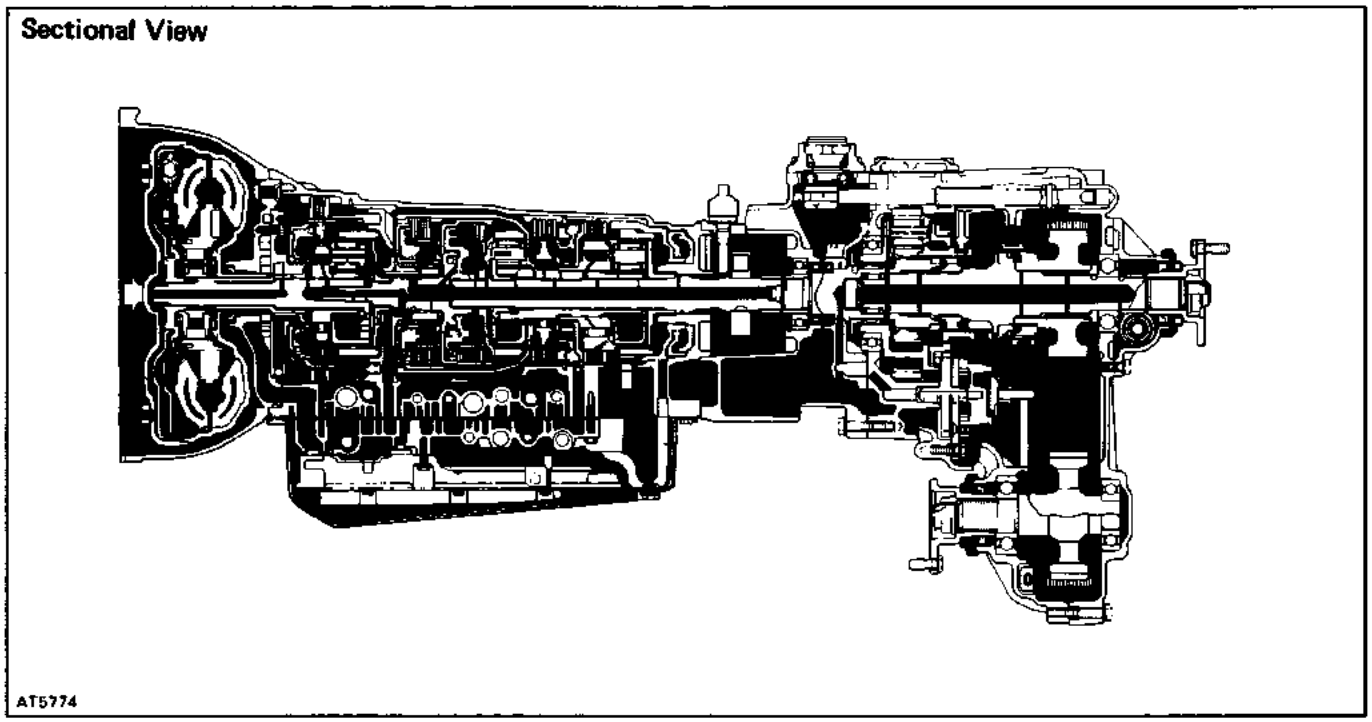

General Specifications

Type of Transmission			A340F
Type of Engine			22R-E
Torque Converter Clutch	Stall Torque Ratio		2.3 : 1
	Lock–Up Mechanism		Equipped
Gear Ratio	1 st Gear		2.804
	2nd Gear		1.531
	3rd Gear		1.000
	O/D Gear		0.705
	Reverse Gear		2.393
Plates (Disc/Plate)	C_0	O/D Direct Clutch	1/1
	C_1	Forward Clutch	4/4
	C_2	Direct Clutch	3/3
	B_2	2nd Brake	4/4
	B_3	1 st & Reverse Brake	5/5
	B_0	O/D Brake	3/2
ATF	Type		ATF DEXRON® II
	Capacity litter (US qts, Imp. qts)	Total	7.6 (8.0, 6.7)
		Drain and Refill	2.0 (2.1, 1.8)

OPERATION

Mechanical Operation

OPERATING CONDITIONS

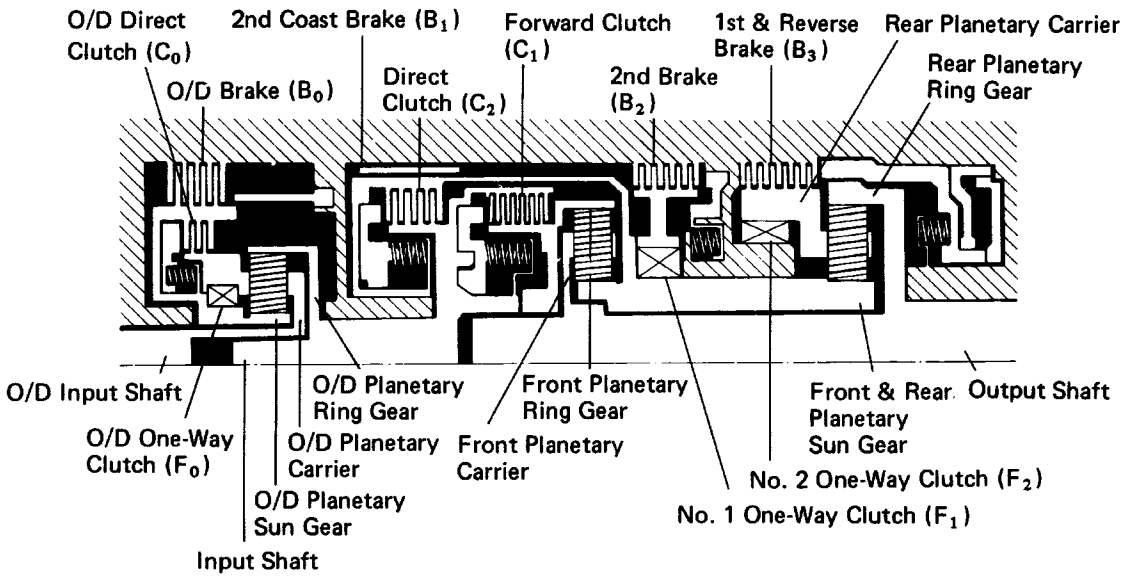

AT2157

○ ..... Operating

Shift lever position	Gear position	C_0	C_1	C_2	B_0	B_1	B_2	B_3	F_0	F_1	F_2
P	Parking	○									
R	Reverse	○		○				○	○		
N	Neutral	○									
D	1st	○	○						○		○
	2nd	○	○				○		○	○	
	3rd	○	○	○			○		○		
	O/D		○	○	○		○				
2	1st	○	○						○		○
	2nd	○	○			○	○		○	○	
	3rd	○	○	○			○		○		
L	1st	○	○					○	○		○
	* 2nd	○	○			○	○		○	○	

* Down–shift only in the L position and 2nd gear–no up–shift.

FUNCTION OF COMPONENTS

NOMENCLATURE	OPERATION
O/D Direct Clutch (Co)	Connects overdrive sun gear and overdrive carrier
O/D Brake (Bo)	Prevents overdrive sun gear from turning either clockwise or counterclockwise
O/D One–Way Clutch (Fo)	When transmission is being driven by engine, connects overdrive sun gear and overdrive carrier
Forward Clutch (Cl)	Connects input shaft and front planetary ring gear
Direct Clutch (C2)	Connects input shaft and front & rear planetary sun gear
2nd Coast Brake (Bl)	Prevents front & rear planetary sun gear from turning either clockwise or counterclockwise
2nd Brake (B2)	Prevents outer race of F, from turning either clockwise or counterclockwise, thus preventing front & rear planetary sun gear from turning counterclockwise
1 st & Reverse Brake (B3)	Prevents rear planetary carrier from turning either clockwise or counterclockwise
No. 1 One–Way Clutch (Fl)	When B2 is operating, prevents front & rear planetary sun gear from turning counterclockwise
No.2 One–Way Clutch 1F21	Prevents rear planetary carrier from turning counterclockwise

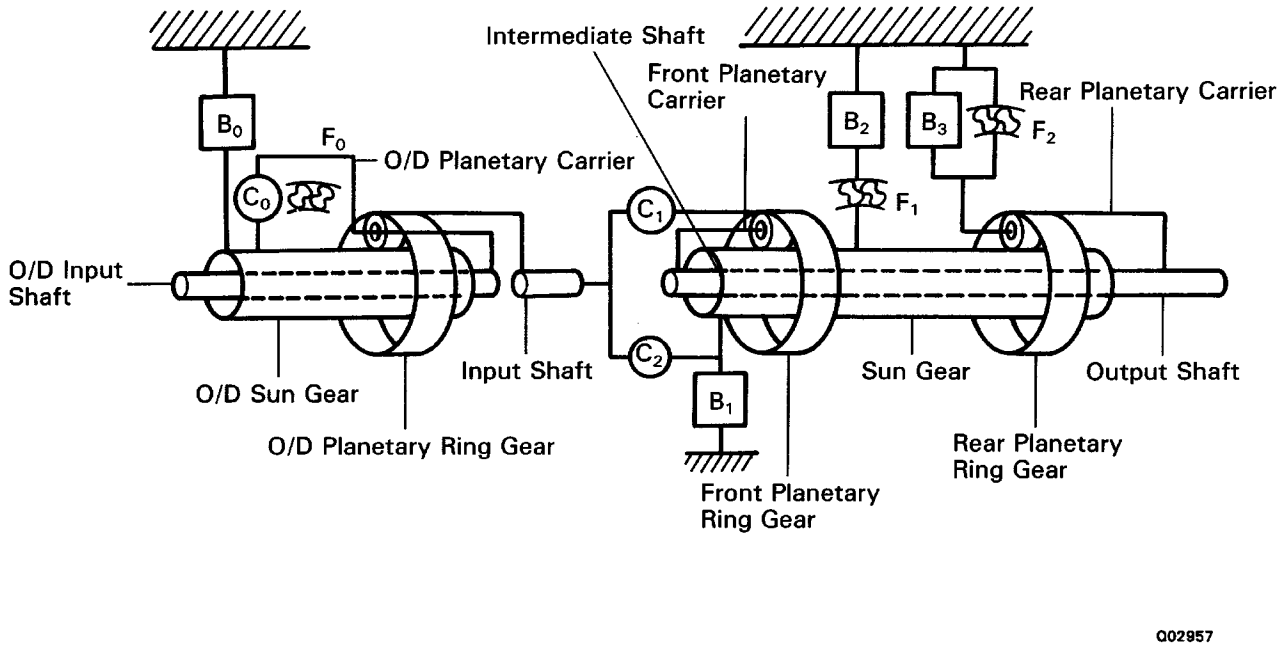

FUNCTION OF COMPONENTS (Cont'd)

The conditions of operation for each gear position are shown in the following illustrations:

D or 2 Position 1st Gear

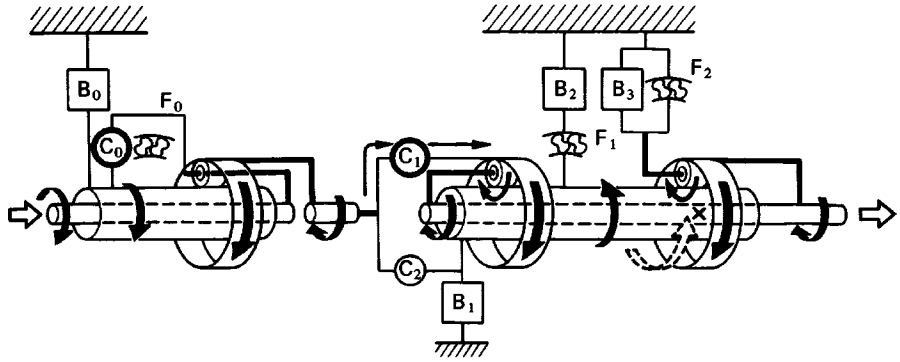

AT6675

D Position 2nd Gear

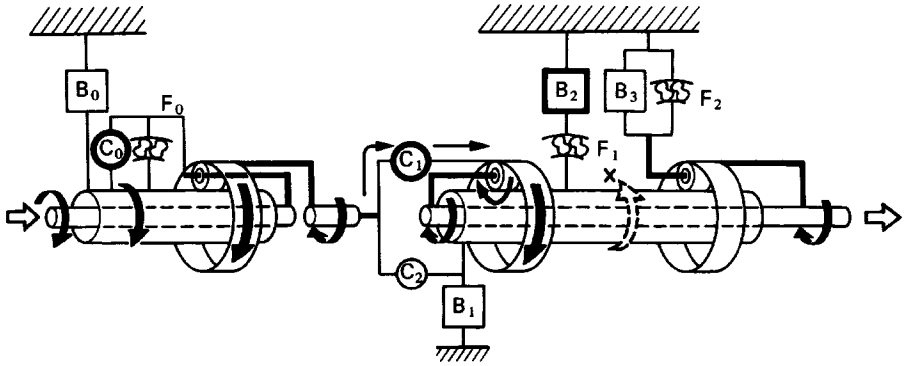

AT6676

D or 2 Position 3rd Gear

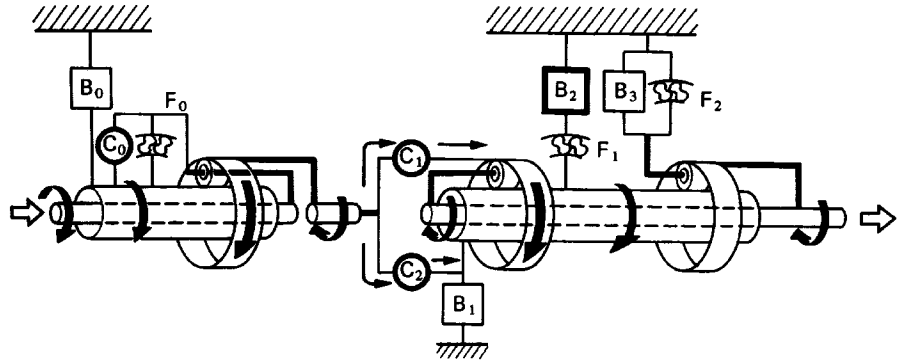

AT6677

D Position O/D

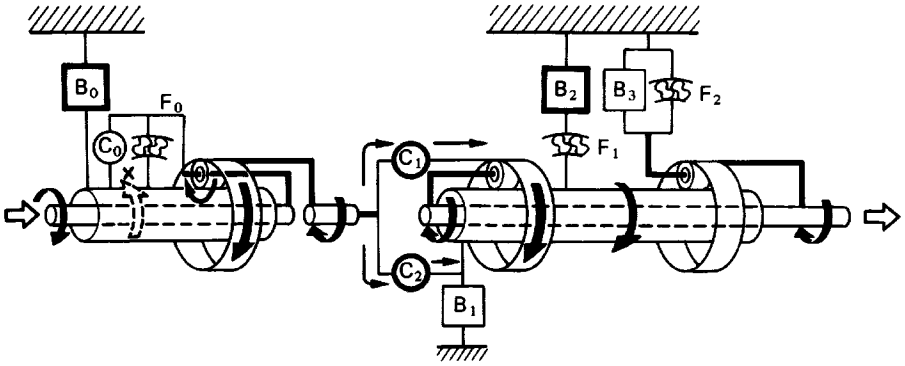

AT6678

FUNCTION OF COMPONENTS (Cont'd)

2 or L Position Gear

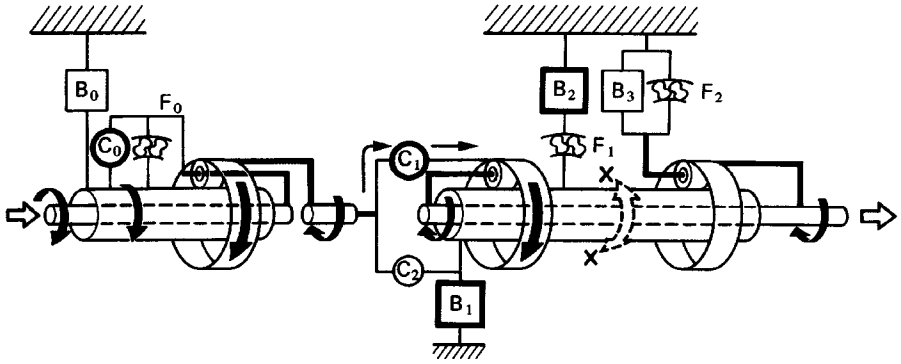

AT6679

L Position 1st Gear

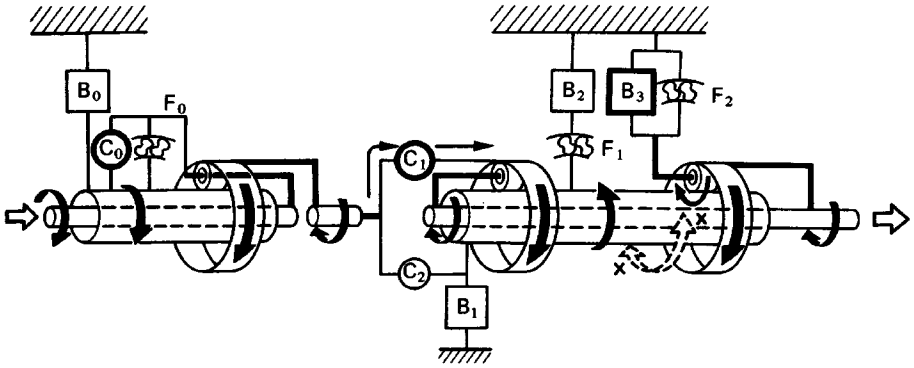

AT6680

R Position Reverse Gear

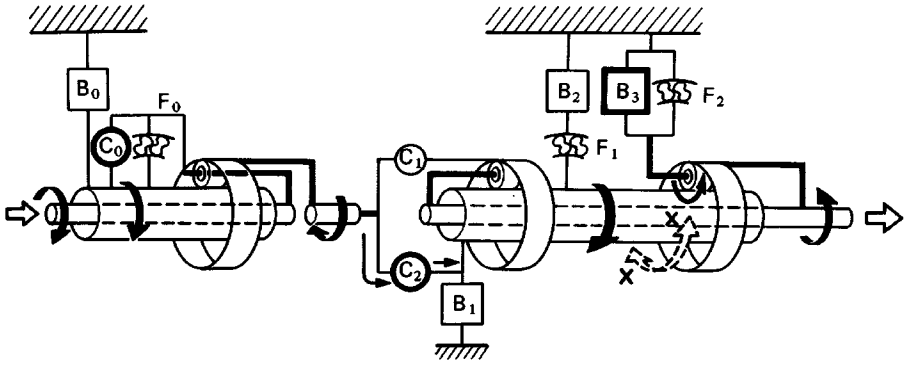

AT6681

HYDRAULIC CONTROL SYSTEM

The hydraulic control system is composed of the oil pump, the valve body, the solenoid valves, and the clutches and brakes, as well as the fluid passages which connect all of these components. Based on the hydraulic pressure created by the oil pump, the hydraulic control system governs the hydraulic pressure acting on the torque converter clutch, clutches and brakes in accordance with the vehicle driving condi–tions.

There are three solenoid valves on the valve body. These solenoid valves are turned on the off by signals from the ECM to operate the shift valves. These shift valves then switch the fluid passages so that fluid goes to the torque converter clutch and planetary gear units.

(Except for the solenoid valves, the hydraulic control system of the electronic controlled transmission is ba–
sically the same as that of the fully hydraulic controlled automatic transmission.)

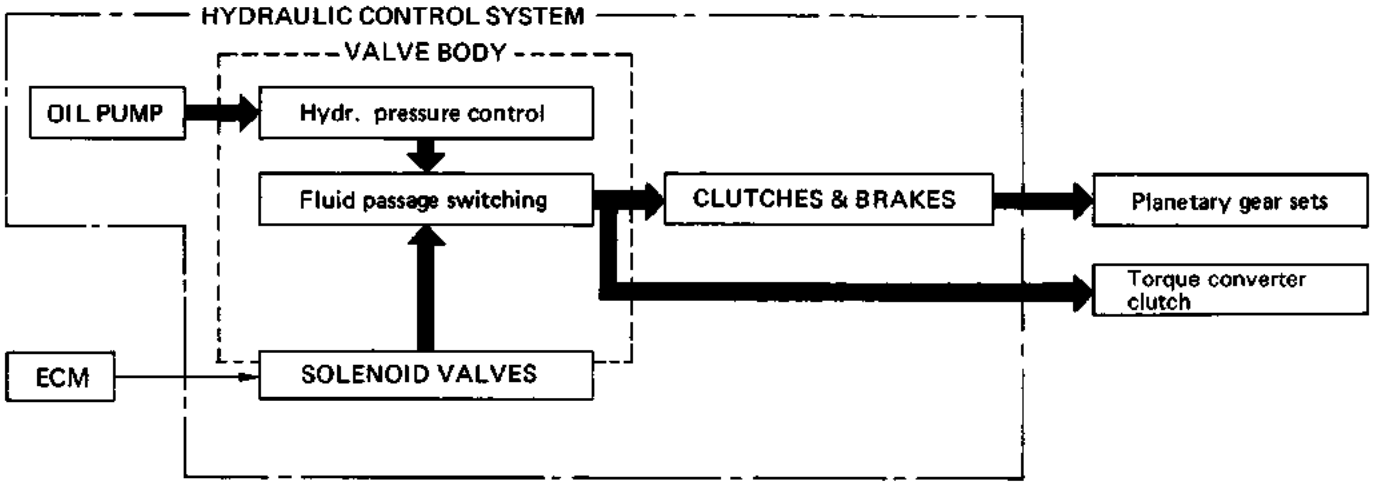

- **LINE PRESSUR**E
  Line pressure is the most basic and important pressure used in the automatic transmission, because it is used to operate all of the clutches and brakes in the transmission.
  If the primary regulator valve does not operate correctly, line pressure will be either too high or too low. Line pressure that is too high will lead to shifting shock and consequent engine power loss due to the greater effort required of the oil pump; line pressure that is too low will cause slippage of clutches and brakes, which will, in extreme cases, prevent the vehicle from moving. Therefore, if either of these problems are noted, the line pressure should be measured to see if it is within stan–dard.
- **THROTTLE PRESSURE**
  Throttle pressure is always kept in accordance with the opening angle of the engine throttle valve. This throttle pressure acts on the primary regulator valve and, accordingly, line pressure is regulated in response to the throttle valve opening.
  In the fully hydraulic controlled automatic transmission, throttle pressure is used for regulating line pressure and as signal pressure for up–shift and down–shift of the transmission. In the electronic controlled transmission, however, throttle pressure is used only for regulating line pressure. Conse–quently, improper adjustment of the transmission throttle cable may result in a line pressure that is too high or too low. This, in turn, will lead to shifting shock or clutch and brake slippage.

ELECTRONIC CONTROL SYSTEM

The electronic control system, which controls the shift points and the operation of the lock–up clutch, is composed of the following three parts:

1. Sensors

These sensors sense the vehicle speed, throttle opening and other conditions and send these data to the ECM in the form of electrical signals.

2. ECM

The ECM determines the shift and lock–up timing based upon the signals from sensors, and con–trols the solenoid valves of the hydraulic control unit accordingly.

3. Actuators

These are three solenoid valves that control hydraulic pressure acting on the hydraulic valves to control shifting and lock–up timing.

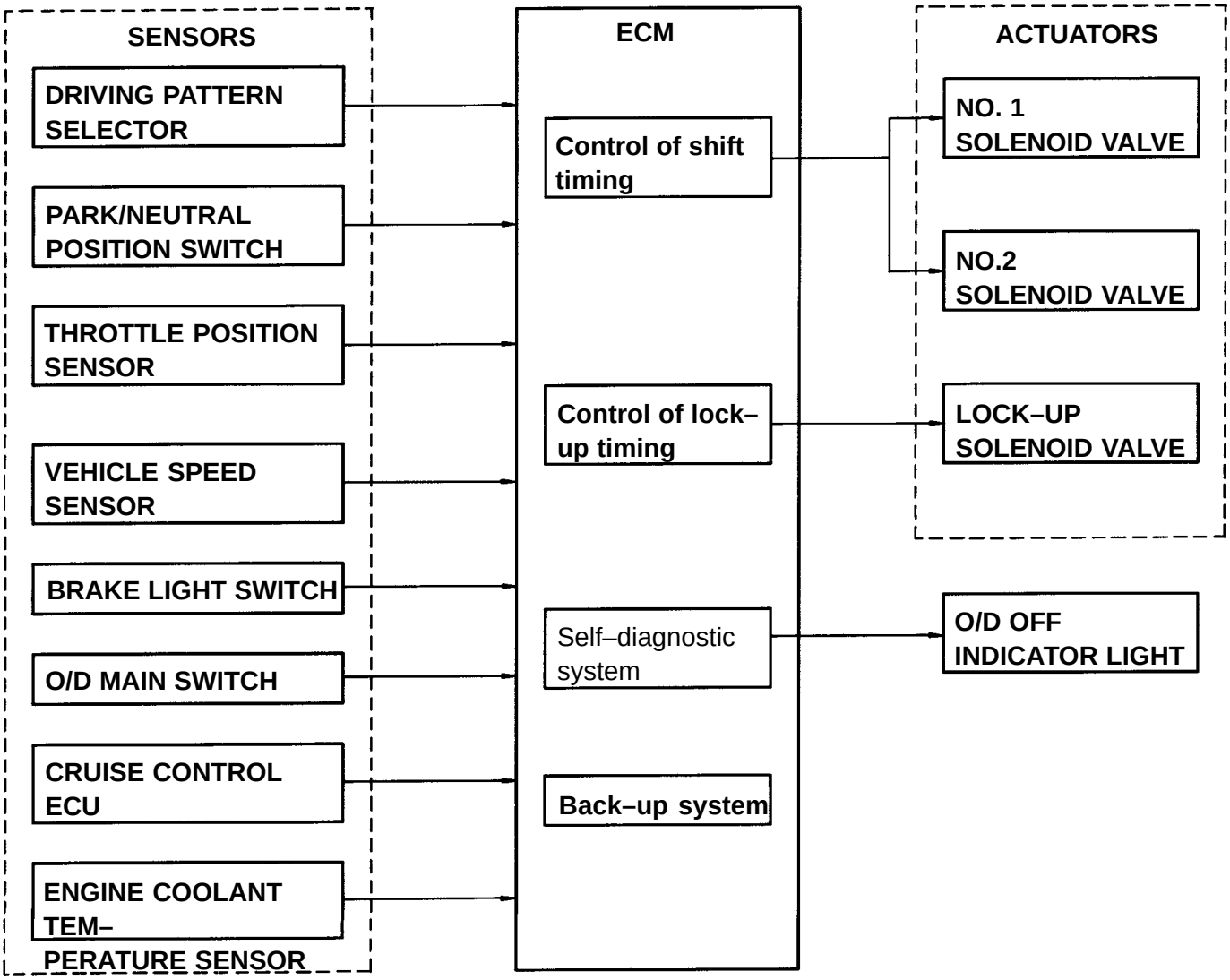

FUNCTION OF ECM

- **Control of Shift Timing**
  The ECM has programmed into its memory the optimum shift pattern for each shift lever position (D, 2, L position) and driving mode (Normal or Power).
  Based on the appropriate shift pattern, the ECM turns No. 1 and No.2 solenoid valves on or off in accor–dance with the vehicle speed signal from the vehicle speed sensor and the throttle opening signal from the throttle position sensor. In this manner, the ECM operates each shift valve, opening or closing the fluid passages to the clutches and brakes to permit up–shift or down–shift of the transmission.

HINT: The electronic control system provides shift timing and lock–up control only while the vehicle is traveling forward. In REVERSE, PARK, and NEUTRAL, the transmission is mechanically, not electroni–cally controlled.

- **Control of Overdrive**
  Driving in overdrive is possible if the O/D main switch is on and the shift lever is in the D position. How–ever, when the vehicle is being driven using the cruise control system (CCS), if the actual vehicle speed drops to about 4 km/h (2 mph) below the set speed while the vehicle is running in overdrive, the CCS ECU sends a signal to the ECM to release the overdrive and prevent the transmission from shifting back into overdrive until the actual vehicle speed reaches the speed set in the CCS memory.
  On this model, if the engine coolant temperature falls below 70°C (158°F), preventing the transmission from up–shifting into overdrive.
- **Control of Lock–Up System**
  The ECM has programmed in its memory a look–up clutch operation pattern for each driving mode (Nor–mal or Power). Based on this lock–up pattern, the ECM turns lock–up solenoid valve on or off in accor–dance with the vehicle speed signals received from the vehicle speed sensor and the throttle opening sig–nals from the throttle position sensor.
  Depending on whether lock–up solenoid valve is on or off, the lock–up relay valve performs changeover of
  the fluid passages for the converter pressure acting on the torque converter clutch to engage or disen–gage the lock–up clutch.
  (Mandatory Cancellation of Lock–Up System)
  If any of the following conditions exist, the ECM turns off lock–up solenoid valve to disengage the lock–up clutch.
  1) The brake light switch comes on (during braking).
  2) The IDL points of the throttle position sensor close (throttle valve fully closed).
  3) The vehicle speed drops 4 km/h (2 mph) or more below the set speed while the cruise control system is operating.
  4) The engine coolant temperature falls below 70°C (158°F).
  The purpose of 1) and 2) above is to prevent the engine from stalling if the rear wheels lock up. The pur–pose of 3) is to cause the torque converter clutch to operate to obtain torque multiplication. The purpose of 4) is both to improve general driveability, and to speed up transmission warm–up.
  Also, while the lock–up system is in operation, the ECM will temporarily turn it off during up–shift or down–shift in order to decrease shifting shock.

TROUBLESHOOTING

Basic Troubleshooting

Before troubleshooting an electronic controlled transmission, first determine whether the problem is electrical or mechanical. To do this, just refer to the basic troubleshooting flow–chart provided below.
If the cause is already known, using the basic troubleshooting chart below along with the general troubleshooting chart on the following pages should speed the procedure.

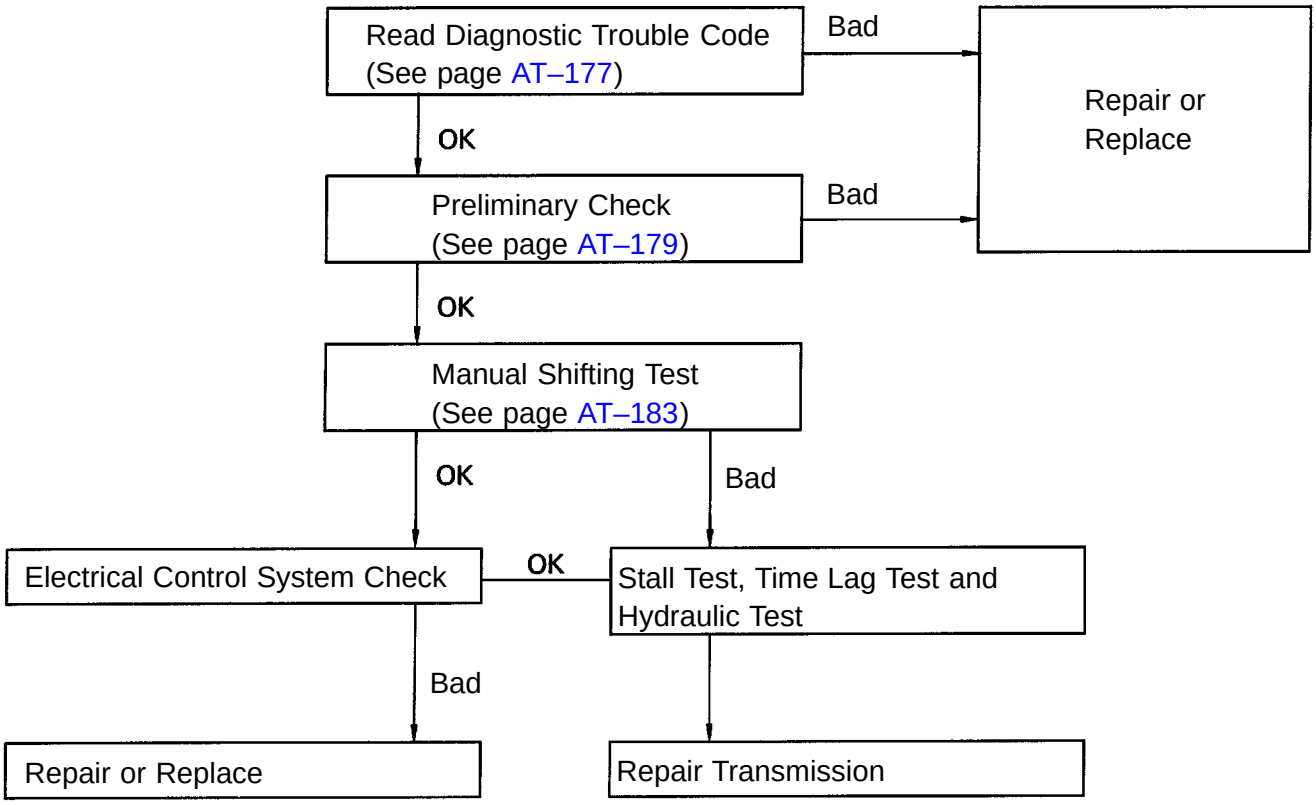

General Troubleshooting

Problem	Possible cause	Remedy	Page
Fluid discolored or smells burnt	Fluid contaminated Torque converter clutch faulty Transmission faulty	Replace fluid Replace torque converter clutch Disassemble and inspect transmission	AT–181 AT–212 ★
Vehicle does not move in any forward position or reverse	Manual linkage out of adjustment Valve body or primary regulator faulty Parking lock pawl faulty Torque converter clutch faulty Converter drive plate broken Oil pump intake screen blocked Transmission faulty	Adjust linkage Inspect valve body Inspect parking lock pawl Replace torque converter clutch Replace drive plate Clean screen Disassemble and inspect transmission	AT–182 AT–208 AT–212 AT–212 ★ ★
Shift lever position incorrect	Manual linkage out of adjustment Manual valve and lever faulty Transmission faulty	Adjust linkage Inspect valve body Disassemble and inspect transmission	AT–182 ★
Harsh engagement into any drive position	Throttle cable out of adjustment Valve body or primary regulator faulty Accumulator pistons faulty Transmission faulty	Adjust throttle cable Inspect valve body Inspect accumulator pistons Disassemble and inspect transmission	AT–182 ★ ★ ★
Delayed 1–2, 2–3 or 3–0/D up–shift, or down–shifts from O/D–3 or 3–2 and shifts back to O/D or 3	Electronic control faulty Valve body faulty Solenoid valve faulty	Inspect electronic control Inspect valve body Inspect solenoid valve	AT–184 AT–193
Slips on 1–2, 2–3 or 3–0/D up–shift, or slips or shudders on acceleration	Manual linkage out of adjustment Throttle cable out of adjustment Valve body faulty Solenoid valve faulty Transmission faulty	Adjust linkage Adjust throttle cable Inspect valve body Inspect solenoid valve Disassemble and inspect transmission	AT–182 AT–182 ★ AT–193 ★
Drag, binding or tie–up on 1–2, 2–3 or 3–OID up–shift	Manual linkage out of adjustment Valve body faulty Transmission faulty	Adjust linkage Inspect valve body Disassemble and inspect transmission	AT–182 ★ ★

Remark ★: Refer to A340F Automatic Transmission Repair Manual. (Pub. No. RM271U)

General Troubleshooting (Cont'd)

Problem	Possible cause	Remedy	Page
No lock–up in 2nd, 3rd or O/D	Electronic control faulty Valve body faulty Solenoid valve faulty Transmission faulty	Inspect electronic control Inspect valve body Inspect solenoid valve Disassemble and inspect transmission	AT–184 ★ AT–193 ★
Harsh down–shift	Throttle cable out of adjustment Throttle cable and cam faulty Accumulator pistons faulty Valve body faulty Transmission faulty	Adjust throttle cable Inspect throttle cable and cam Inspect accumulator pistons Inspect valve body Disassemble and inspect transmission	AT–182 AT–182 ★ ★ ★
No down–shift when coasting	Valve body faulty Solenoid valve faulty Electronic control faulty	Inspect valve body Inspect solenoid valve Inspect electronic control	★ AT–193 AT–184
Down–shift occurs too quickly or too late while coasting	Throttle cable faulty Valve body faulty Transmission faulty Solenoid valve faulty Electronic control faulty	Inspect throttle cable Inspect valve body Disassemble and inspect transmission Inspect solenoid valve Inspect electronic control	AT–1 82 ★ ★ AT–193 AT–184
No O/D–3, 3–2 or 2–1 kick–down	Solenoid valve faulty Electronic control faulty Valve body faulty	Inspect solenoid valve Inspect electronic control Inspect valve body	AT–193 AT–184
No engine braking in 2 or L position	Solenoid valve faulty Electronic control faulty Valve body faulty Transmission faulty	Inspect solenoid valve Inspect electronic control Inspect valve body Disassemble and inspect transmission	AT–193 AT–184 ★ ★
Vehicle does not hold in P	Manual linkage out of adjustment Parking lock pawl cam and spring faulty	Adjust linkage Inspect cam and spring	AT–188 AT–208
No H2–H4, H4–L4, L4–H4 or H4–H2 change gear position of transfer	Transfer linkage out of adjustment Transfer faulty	Adjust linkage Disassemble and inspect transfer	AT–182 ★

Remark ★: Refer to A340F Automatic Transmission Repair Manual. (Pub. No. RM271 U)

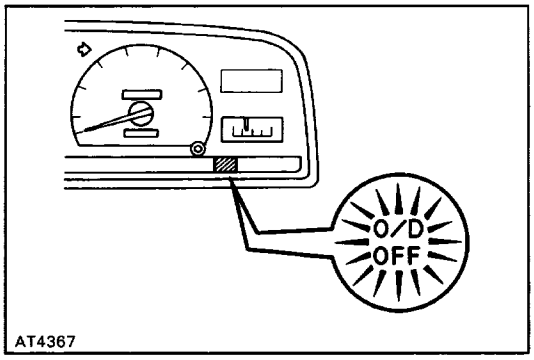

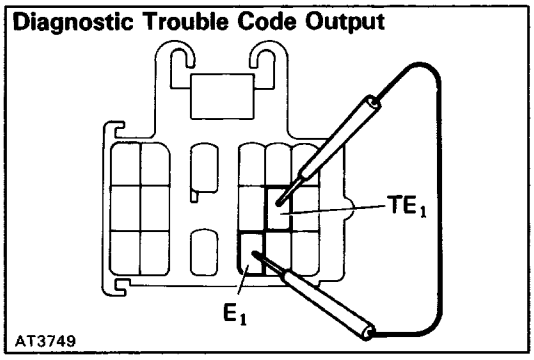

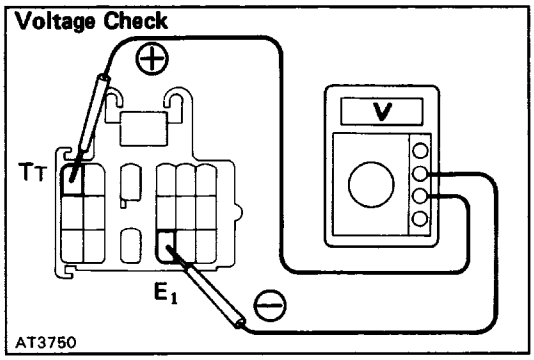

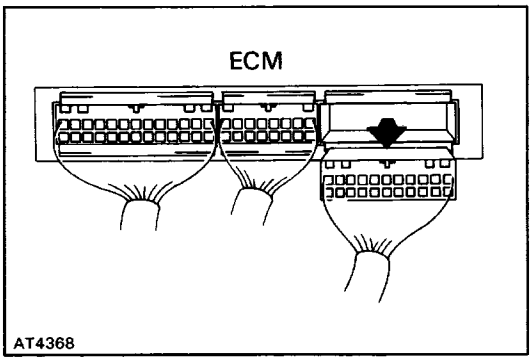

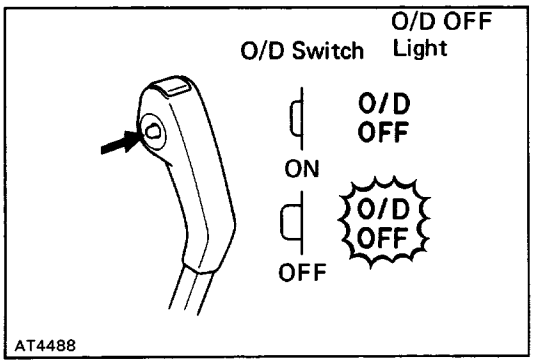

Diagnosis System

DESCRIPTION

1. A self–diagnosis function is built into the electrical control system. Warning is indicated by the overdrive OFF indicator light.

HINT: Warning and diagnostic trouble codes can be read only when the overdrive switch is ON. If OFF, the overdrive OFF light is lit continuously and will not blink.

(a) If a malfunction occurs within the vehicle speed sensors (No. 1 or 2) or solenoids (No. 1, 2), the overdrive OFF light will blink to warn the driver.
However, there will be no warning of a malfunction with lock–up solenoid.

(b) The diagnostic trouble code can be read by the number of blinks of the overdrive OFF indicator light when terminals TE, and El are connected.
(See page AT–1 78)

(c) The throttle position sensor or brake signal are not indicated, but inspection can be made by checking the voltage at terminal TT of the data link connector 1.

(d) The signals to each gear can be checked by measuring the voltage at terminal TT while driving.

2. The diagnostic trouble code is retained in memory by the ECM and due to back–up voltage, is not canceled out when the engine is turned off. Consequently, after repair, it is necessary to turn the ignition switch off and remove the MF I fuse
(1 5A) or disconnect the ECM connector to cancel out the diagnostic trouble code. (See page AT–178)

HINT:

Low battery positive voltage will cause faulty operation of the diagnosis system. Therefore, always check the battery first.
Use a voltmeter and ohmmeter that have an impedance of at least 10 k0/V.

CHECK ”O/D OFF” INDICATOR LIGHT

1. Turn the ignition switch ON.
2. The–O/D OFF” light will come on when the O/D switch is placed at OFF.
3. When the O/D switch is set to ON, the ”O/D OFF” light should go out.
If the–O/D OFF” light flashes when the O/D switch is set to ON, the electronic control system is faulty.

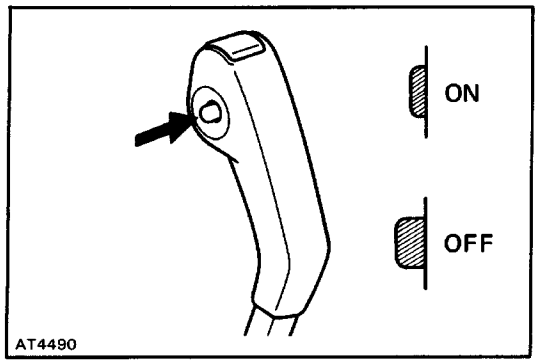

READ DIAGNOSTIC TROUBLE CODE

1. TURN IGNITION SWITCH AND O/D SWITCH TO ON

Do not start the engine.

HINT: Warning and diagnostic trouble codes can be read only when the overdrive switch is ON. If OFF, the overdrive OFF light will light continuously and will not blink.

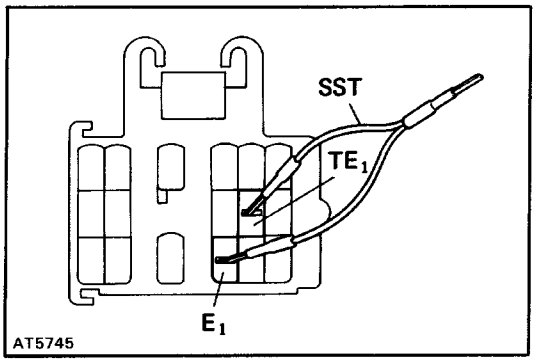

2. CONNECT TE, AND E, TERMINALS OF DATA LINK CONNECTOR 1

Using SST, connect terminals TE, and El.
SST 09843–18020

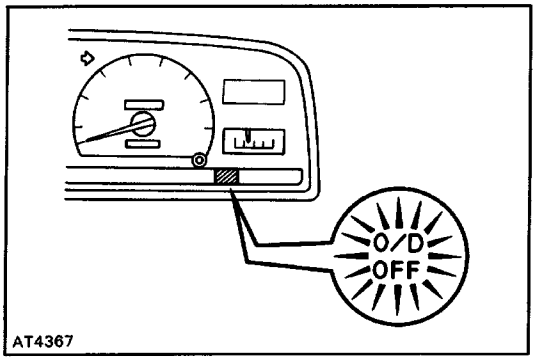

3. READ DIAGNOSTIC TROUBLE CODE

Read the diagnostic trouble code as indicated by the number of times the O/D OFF light flashes.

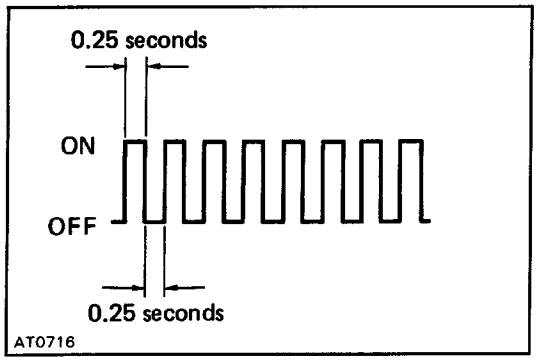

(Diagnostic Trouble Code Indication)

- If the system is operating normally, the light will flash 2 times per second.

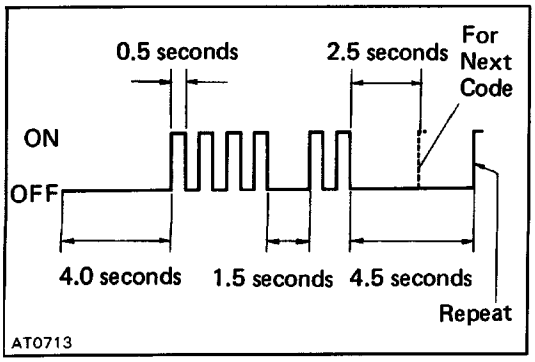

- In the even of a malfunction, the light will flash 1 time per second. The number of blinks will equal the first number and, after 1.5 seconds pause, the second number of the two digit diagnostic trouble code. If there are two or more codes, there will be a 2.5 sec–onds pause between each.

HINT: In the event of several trouble codes occuring si–multaneously, indication will begin from the smaller value and continue to the larger.

4. REMOVE SST

DIAGNOSTIC TROUBLE CODES

Code No.	Light Pattern	Diagnosis System
–		Normal
42		Defective No. 1 vehicle speed sensor (in combination meter)– severed wire harness or short circuit
61		Defective No.2 vehicle speed sensor (in ATM)– severed wire harness or short circuit
62		Severed No. 1 solenoid or short circuit– severed wire harness or short circuit
63		Severed No.2 solenoid or short circuit– severed wire harness or short circuit
64		Severed lock–up solenoid or short circuit– severed wire harness or short circuit

AT2020

HINT: If codes 62, 63 or 64 appear, there is an electri– cal malfunction in the solenoid.
Causes due to mechanical failure, such as a stuck valve, will not appear.

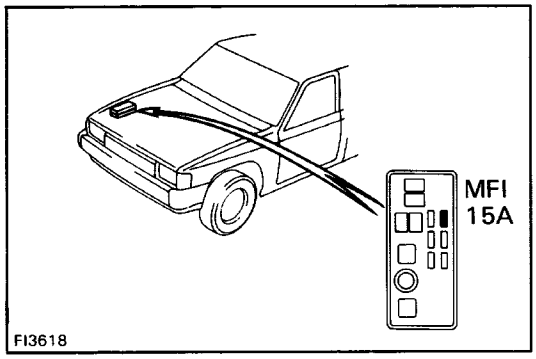

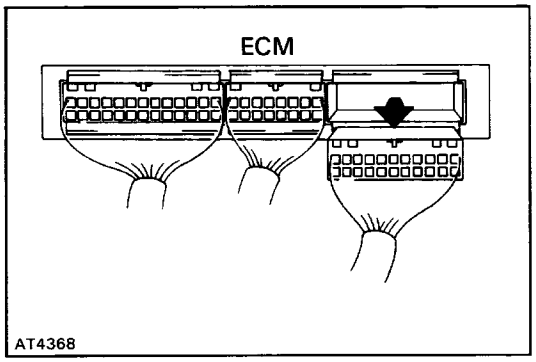

CANCEL OUT DIAGNOSTIC TROUBLE CODE

1. After repair of the trouble area, the diagnostic trouble code retained in memory by the ECM must be canceled by removing the MFI fuse (1 5A) for 10 seconds or more, depending on ambient temperature (the lower the tem– perature, the longer the fuse must be left out) with the ig– nition switch OFF.

HINT:
- Cancellation can be also done by removing the battery negative (–) terminal, but in this case other memory systems will be also canceled out.
- The diagnostic trouble code can be also canceled out by disconnecting the ECM connector.
- If the diagnostic trouble code is not canceled out, it will be retained by the ECM and appear along with a new code in event of future trouble.

2. After cancellation, perform a road test to confirm that a ”normal code” is now read on the O/D OFF light.

TROUBLESHOOTING FLOW–CHART

HINT:

- If diagnostic trouble code Nos. 42, 61, 62 or 63 are output, the overdrive OFF indicator light will begin to blink immediately to warn the driver. However, an impact or shock may cause the blinking to stop; but the code will still be retained in the ECM memory until canceled out.
- There is no warning for diagnostic trouble code No.64.
- In the event of a simultaneous malfunction of both No.1 and No.2 vehicle speed sensors, no diag–nostic trouble code will appear and the fail–safe system will not function. However, when driving in the D position, the transmission will not up–shift from first gear, regardless of the vehicle speed.

Diagnostic trouble code 42 (No.1 vehicle speed sensor circuitry)

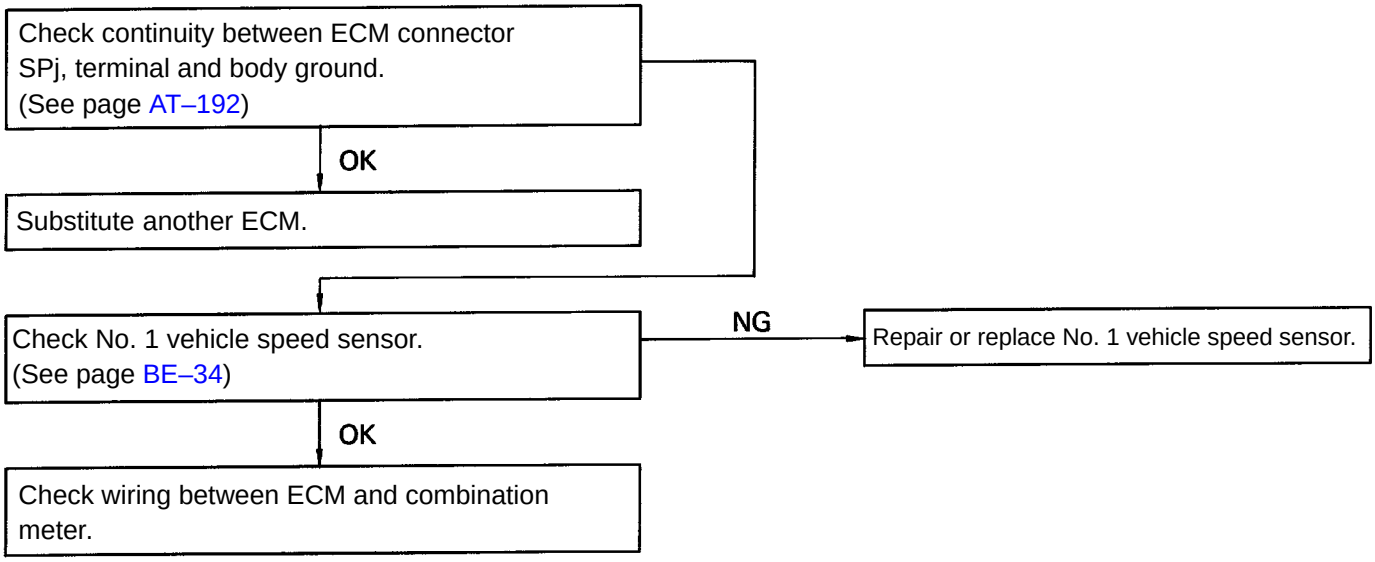

Diagnostic trouble code 61 (No–2 vehicle speed sensor circuitry)

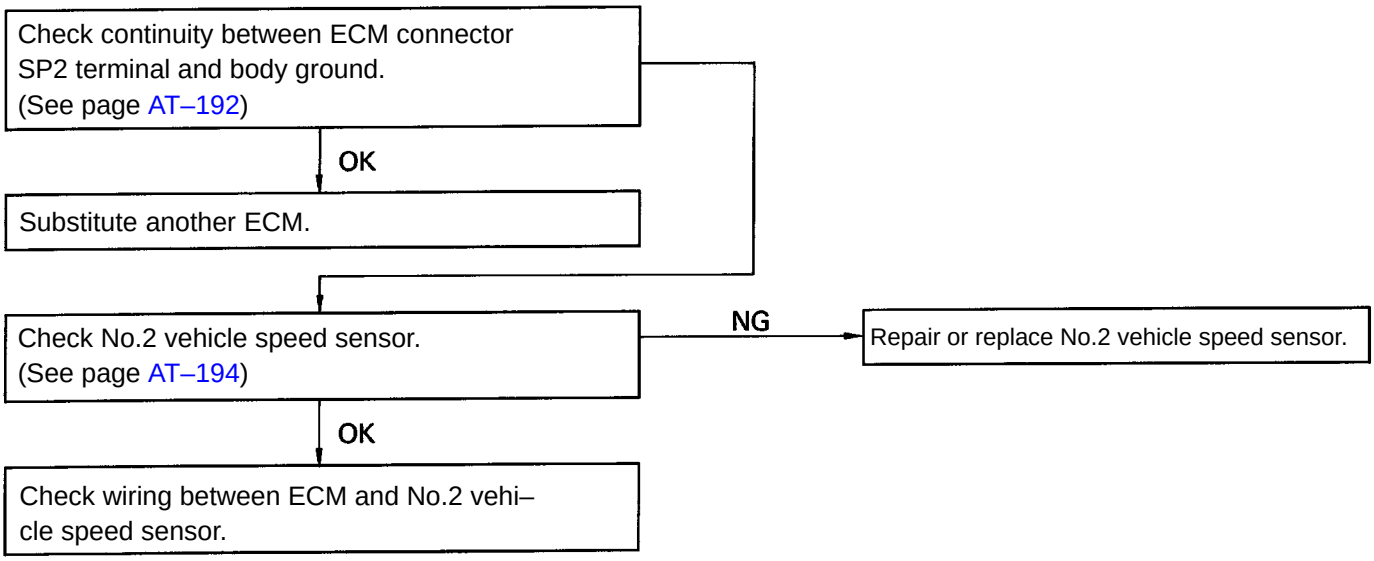

Diagnostic trouble code 62 (No. 1 solenoid valve circuitry)

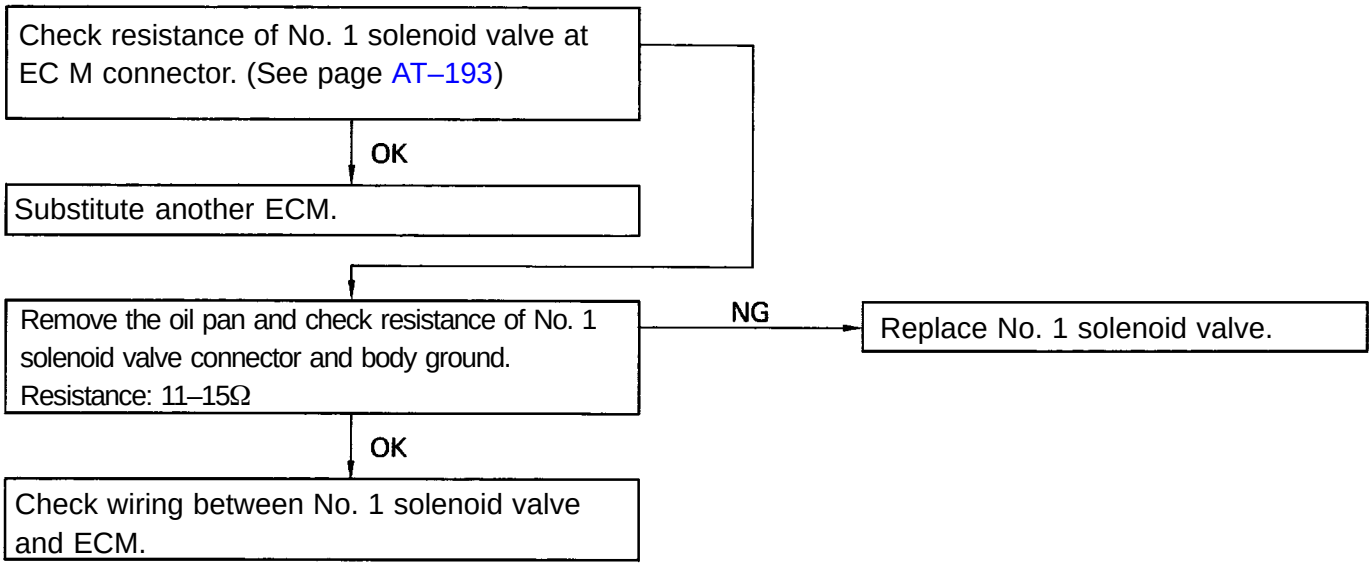

Diagnostic trouble code 63 (No.2 solenoid valve circuitry)

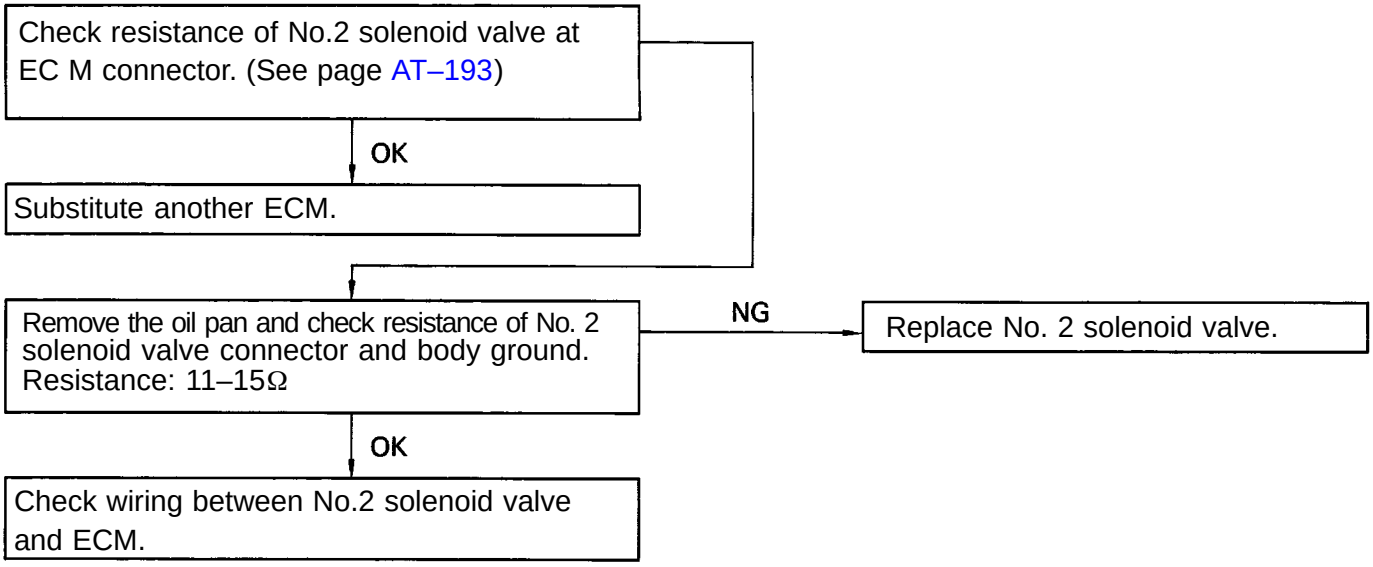

Diagnostic trouble code 64 (Lock–up solenoid valve circuitry)

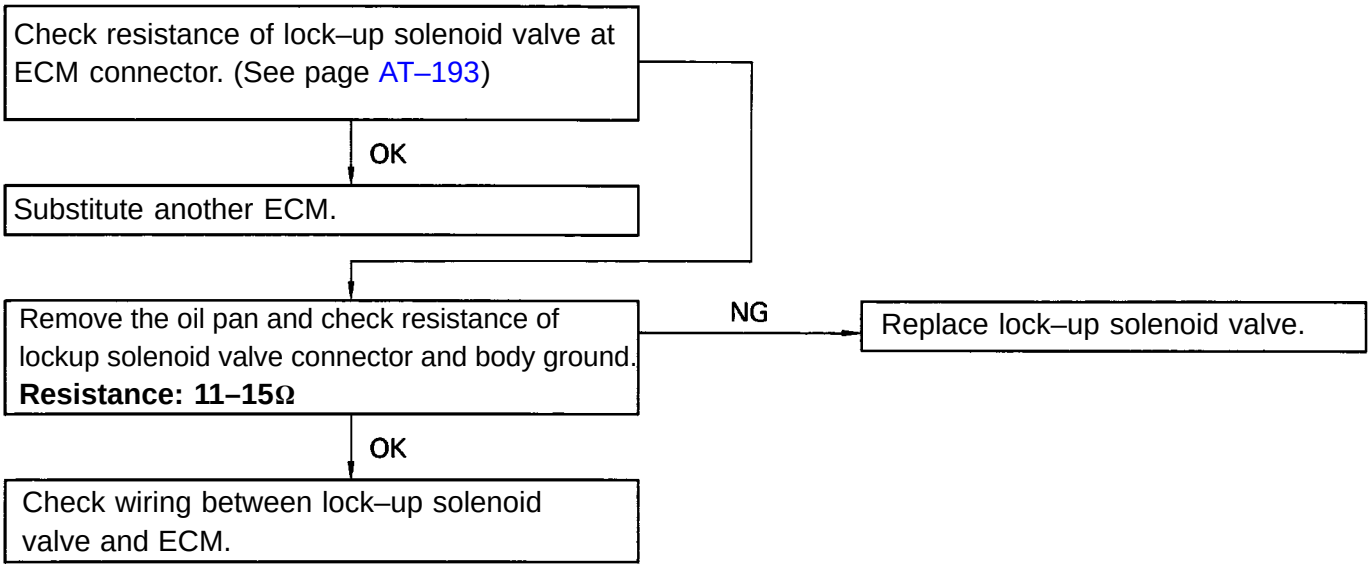

Preliminary Check

1. CHECK FLUID LEVEL

HINT:

- The vehicle must have been driven so that the engine and transmission are at normal operating temperature. (Fluid temperature: 70–80°C or 158–176°F)
- Only use the COOL range on the dipstick as a rough reference when the fluid is replaced or the engine does not run.

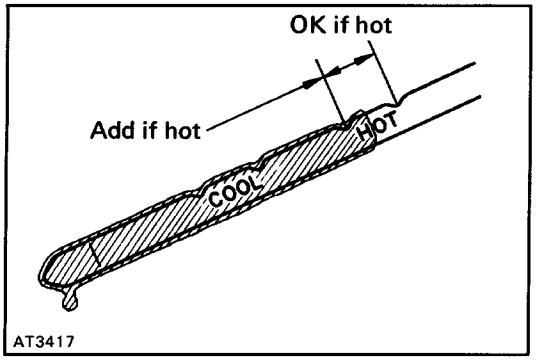

(a) Park the vehicle on a level surface, set the parking brake.

(b) With the engine idling, shift the shift lever into all positions from P to L position and return to P position.

(c) Pull out the transmission dipstick and wipe it clean.

(d) Push it back fully into the tube.

(e) Pull it out and check that the fluid level is in the HOT range.
If the level is at the low side, add fluid.
Fluid type: ATF DEXRON®II

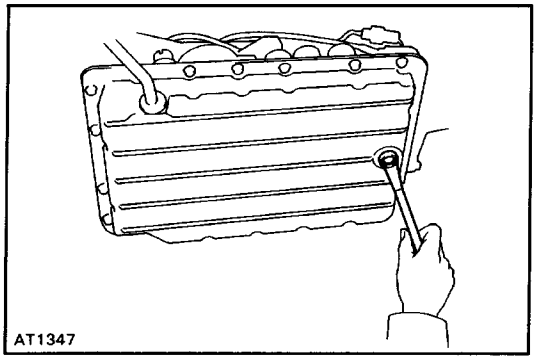

NOTICE: Do not overfill.

2. CHECK FLUID CONDITION

If the fluid smells burnt or is black, replace it as following procedures.

(a) Remove the drain plug and drain the fluid.

(b) Reinstall the drain plug securely.

(e) With the engine OFF, add new fluid through the oil filler tube.
Fluid type: ATF DEXRON® II
Capacity:
Total: 7.6 liters (8.0 US qts, 6.7 Imp. qts)
Drain and refill: 1.6 liters (1.7 US qts, 1.4 Imp. qts)

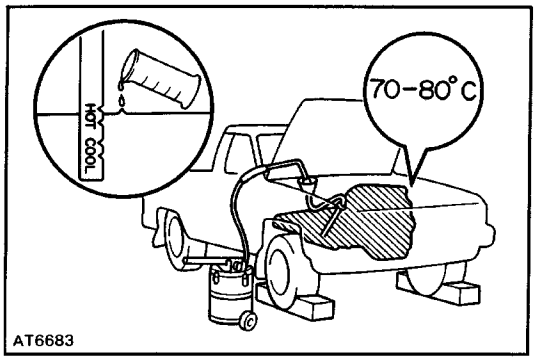

(d) Start the engine and shift the shift lever into all positions from P to L position and then shift into P position.

(e) With the engine idling, check the fluid level. Add fluid up to the COOL level on the dipstick.

(f) Check the fluid level with the normal operating temperature (70–80°C or 158–176°F) and add as necessary.

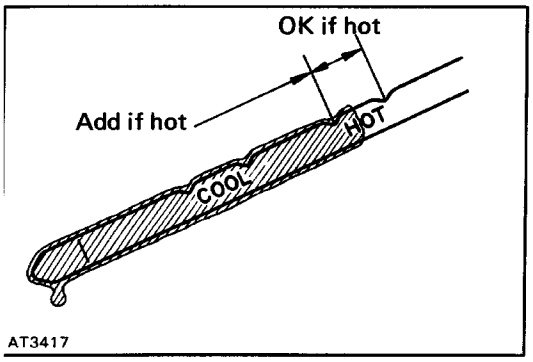

NOTICE: Do not overfill.

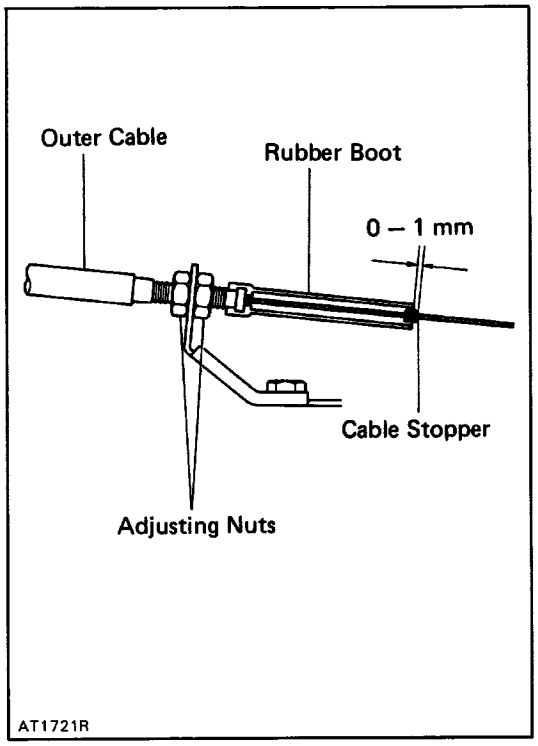

3. INSPECT THROTTLE CABLE

(a) Depress the accelerator pedal all the way and check that the throttle valve opens fully.

HINT: If the valve does not open fully, adjust the accel–erator cable.

(b) Fully depress the accelerator pedal.

(c) Measure the distance between the end of the boot and stopper on the cable.
Standard distance: 0–1 mm (0–0.04 in.)
If the distance is not standard, adjust the cable by the adjusting nuts.

4. INSPECT TRANSMISSION SHIFT LEVER POSITION

When shifting the shift lever from the N position to other position, check that the lever can be shifted smoothly and accurately indicates the position.
If the indicator is not aligned with the correct position, carry out the following adjustment procedures.

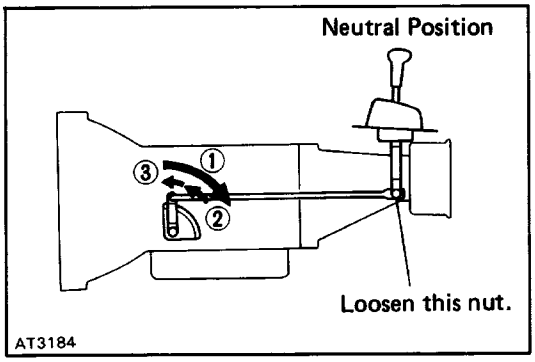

(a) Loosen the nut on the shift lever.

(b) Push the control shaft lever fully rearward.

(c) Return the control shaft lever two notches to N pos–tion.

(d) Set the shift lever to N position.

(e) While holding the shift lever lightly toward the R po–sition side, tighten the shift lever nut.

(f) Start the engine and make sure that the vehicle moves forward when shifting the lever from the N to D position and reverse when shifting it to the R po–sition.

5. INSPECT PARK/NEUTRAL POSITION SWITCH

Check that the engine can be started with the shift lever only in the N or P position, but not in other positions.
If not as started above, carry out the following adjust–ment procedures.

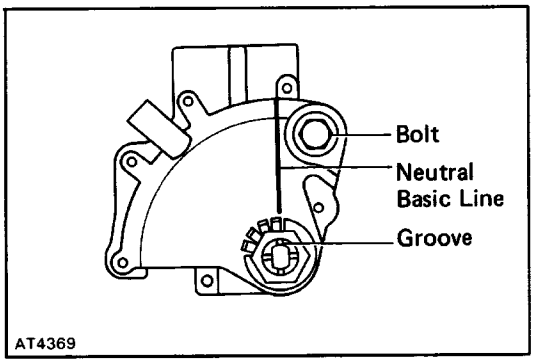

(a) Loosen the park/neutral position switch bolt and set the shift lever to the N position.

(b) Align the groove and neutral basic line.

(c) Hold in position and tighten the bolt.

Torque: 13 N–m (130 kgf–cm, 9 ft–lbf)

6. INSPECT IDLE SPEED (N POSITION)

Connect a tachometer test probe, to the data link con–nectar 1 terminal IG (–), inspect the idle speed.
Idle speed: 850 RPM

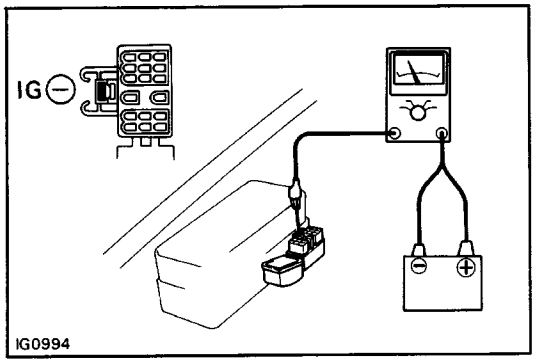

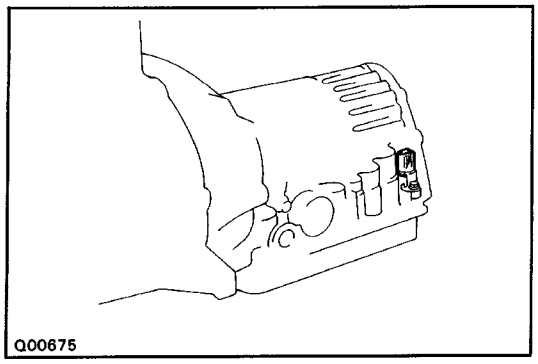

Manual Shifting Test

HINT: With this test, it can be determined whether the trouble lies within the electrical circuit or is a mechanical problem in the transmission.

1. DISCONNECT SOLENOID WIRE

2. INSPECT MANUAL DRIVING OPERATION

Check that the shift and gear positions correspond with the table below.

Shift Position	D position	2 position	L position	R position	P position
Gear Position	O/D	3rd	1 st	Reverse	Pawl Lock

HINT: If the 1, 2 and D position gear positions are diffi–cult to distinguish, perform the following road test.

- While driving, shift through the L, 2 and D positions. Check that the gear change corresponds to the shift position.
  If any abnormality is found in the above test, the prob-lem lies in transmission itself.

3. CONNECT SOLENOID WIRE

4. CANCEL OUT DIAGNOSTIC TROUBLE CODE

(See page AT–178)

REFERENCE: Possible gear positions in accordance with solenoid operating conditions.

Position	NORMAL			NO. 1 SOLENOID MALFUNCTIONING			NO.2 SOLENOID MALFUNCTIONING			BOTH SOLENOIDS MALFUNCTIONING		
	Solenoid Valve		Gear Position	Solenoid Valve		Gear Position	Solenoid Valve		Gear Position	Solenoid Valve		Gear Position
	No. 1	No.2		No. 1	No. 2		No. 1	No. 2		No. 1	No. 2	
D position	**ON**	OFF	**1st**	×	ON (OFF)	3rd (O/D)	**ON**	×	**1st**	×	×	O/D
	ON	**ON**	2nd	×	**ON**	3rd	OFF (ON)	×	O/D (1 SO	×	×	O/D
	OFF	**ON**	3rd	×	**ON**	3rd	OFF	×	O/D	×	×	O/D
	OFF	OFF	O/D	×	OFF	O/D	OFF	×	O/D	×	×	O/D
2 position	**ON**	OFF	**1st**	×	ON (OFF)	3rd (O/D)	**ON**	×	**1st**	×	×	3rd
	ON	**ON**	2nd	×	**ON**	3rd	OFF (ON)	×	3rd (1st)	×	×	3rd
	OFF	**ON**	3rd	×	**ON**	3rd	OFF	×	3rd	×	×	3rd
L position	**ON**	OFF	**1st**	×	OFF	**1st**	**ON**	×	**1st**	×	×	**1st**
	ON	**ON**	2nd	×	**ON**	2nd	**ON**	×	**1st**	×	×	**1st**

( ) : No fail–safe function x : Malfunctions

Electronic Control System

PRECAUTION

Do not open the cover or the case of the ECM and various computer unless absolutely necessary. (If the IC terminals are touched, the IC may be destroyed by static electricity.)

ELECTRONIC CONTROL CIRCUIT

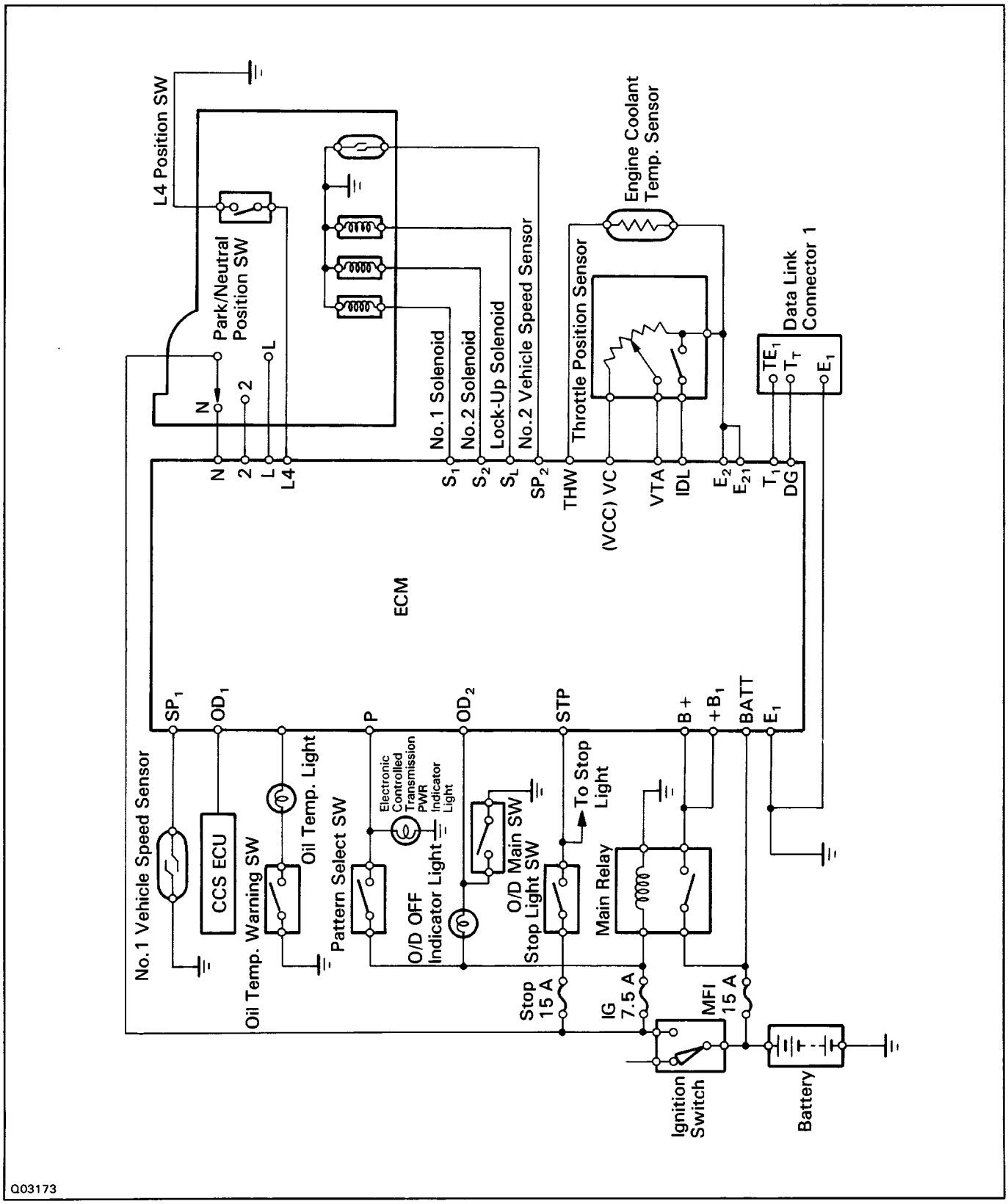

ELECTRONIC CONTROL COMPONENTS

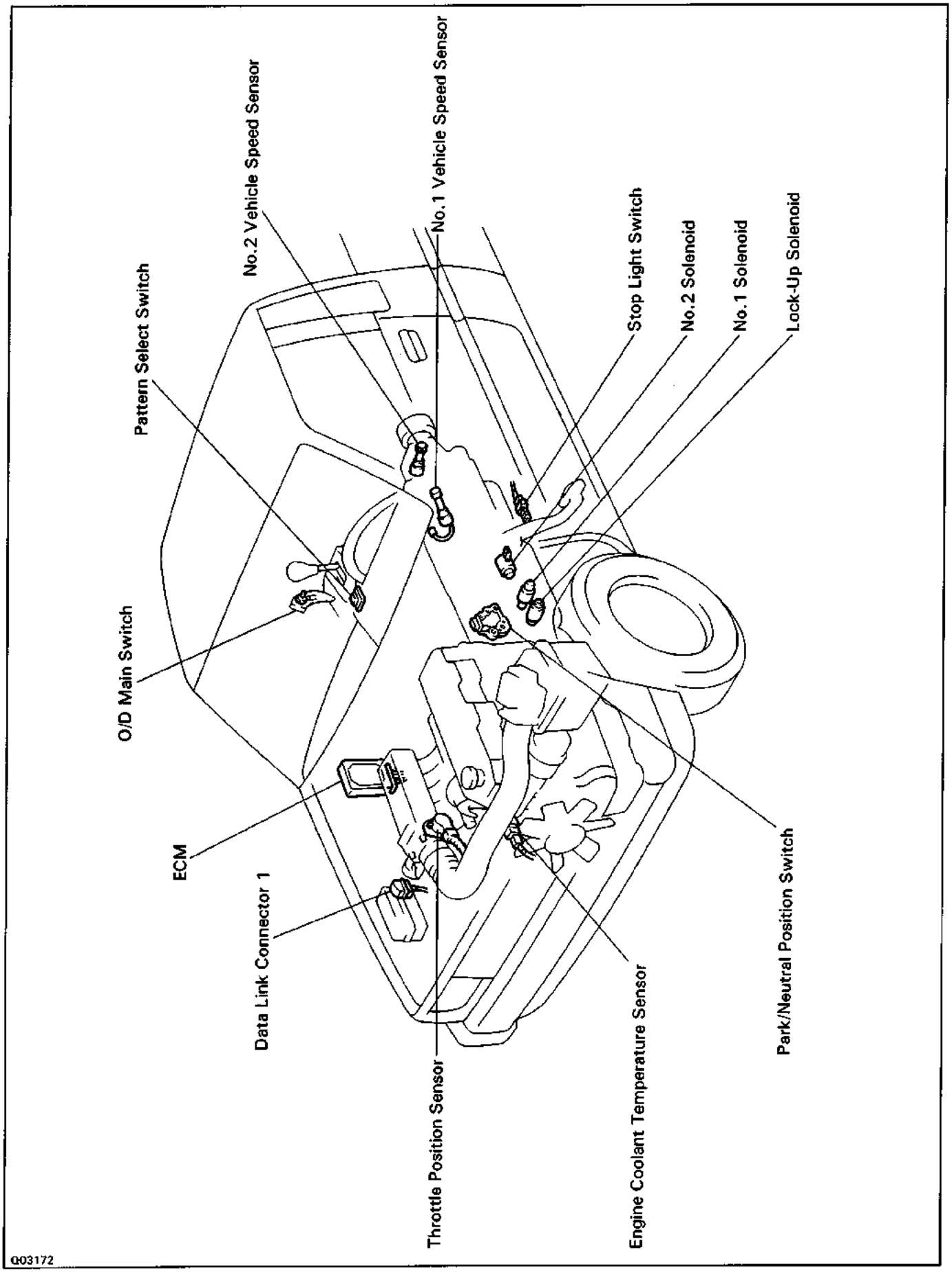

TROUBLESHOOTING FLOW–CHART

Trouble No. 1 No Shifting

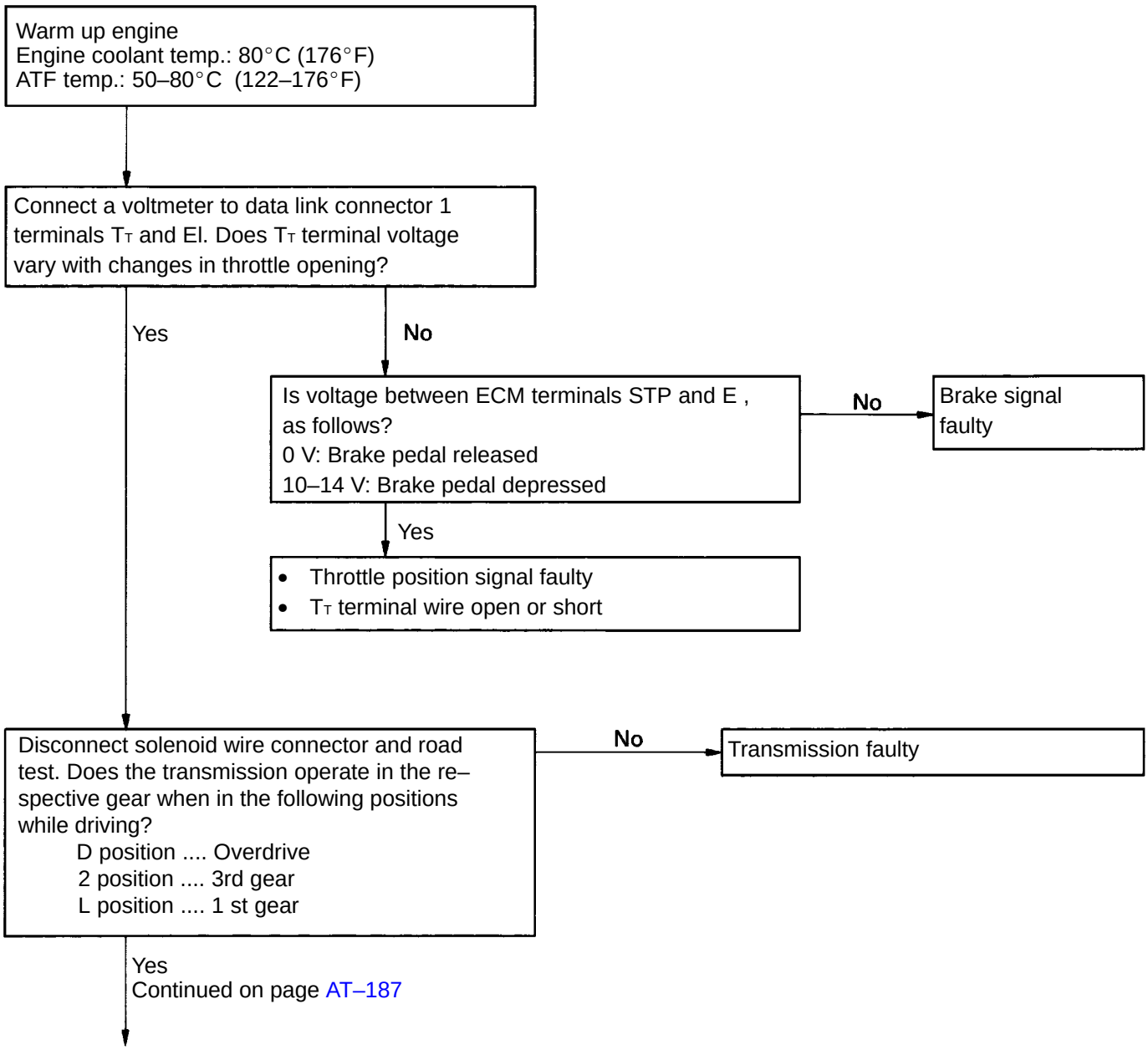

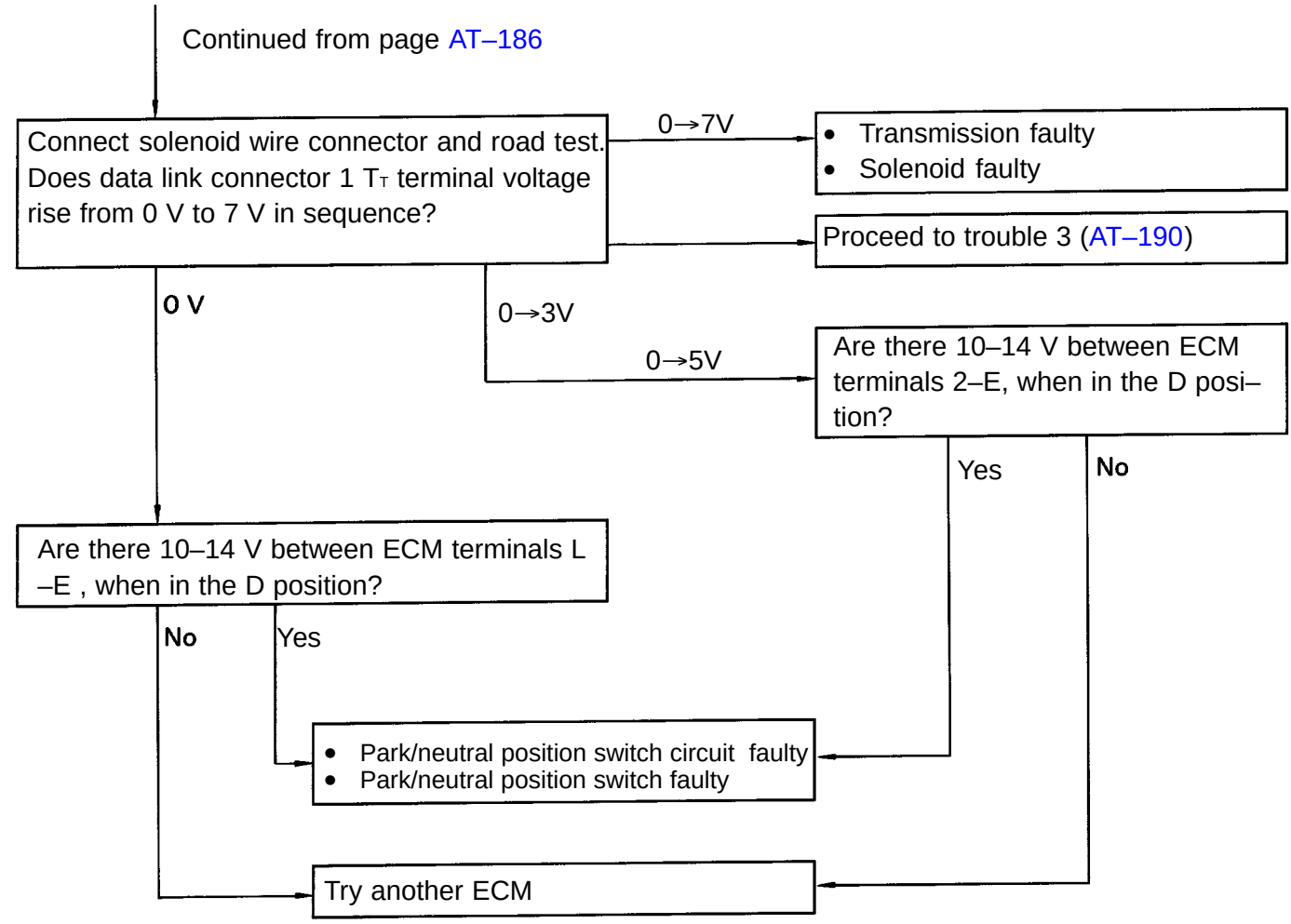
Continued from page AT–186
Connect solenoid wire connector and road test. Does data link connector 1 T_T terminal voltage rise from 0 V to 7 V in sequence?
0→7V
• Transmission faulty
• Solenoid faulty
Proceed to trouble 3 (AT–190)
0 V
0→3V
0→5V
Are there 10–14 V between ECM terminals 2–E, when in the D position?
Yes
No
Are there 10–14 V between ECM terminals L –E , when in the D position?
No
Yes
• Park/neutral position switch circuit faulty
• Park/neutral position switch faulty
Try another ECM

Trouble No.2 Shift point too high or too low

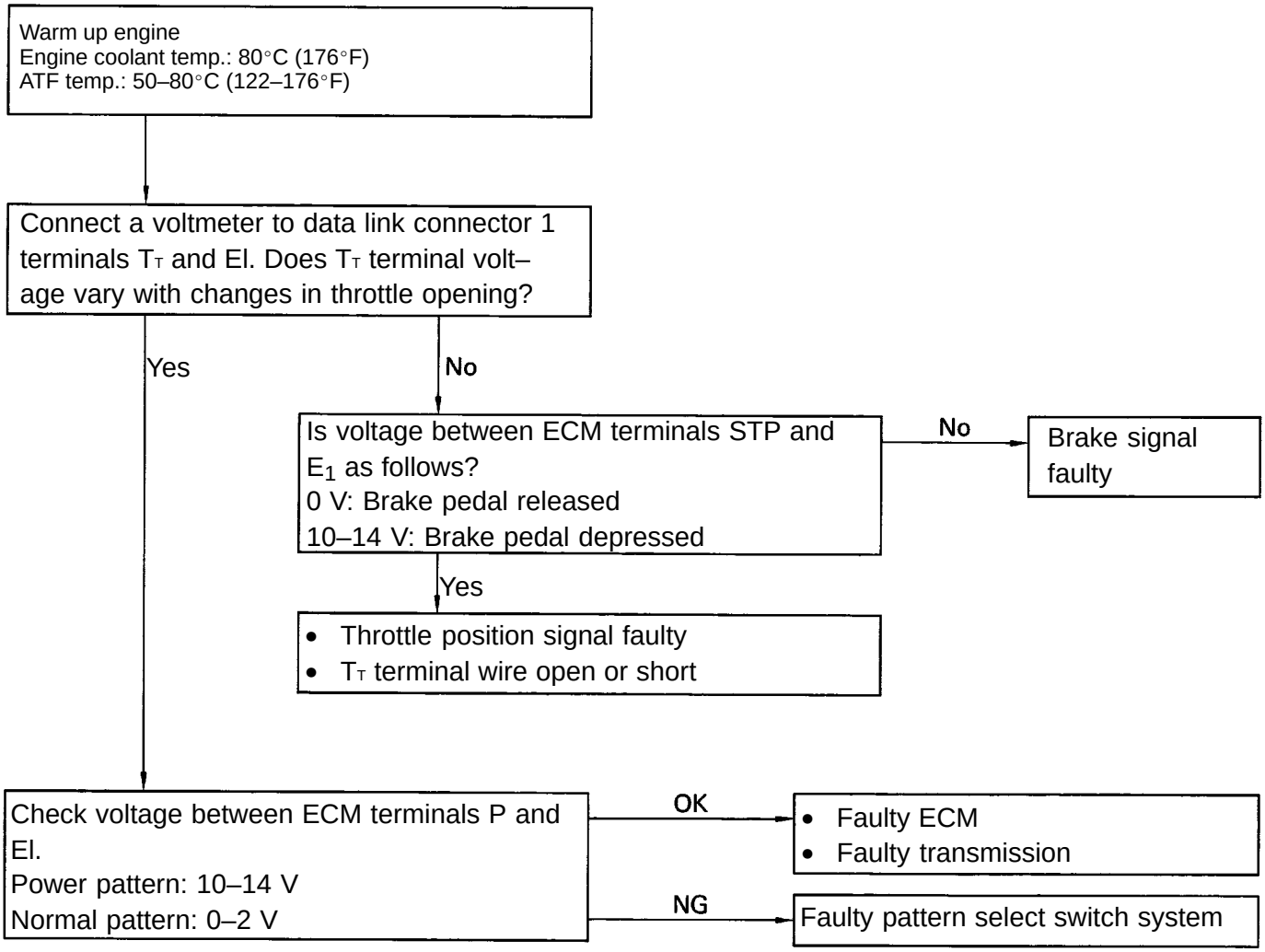

Trouble No–3 No up–shift to overdrive (After warm–up)

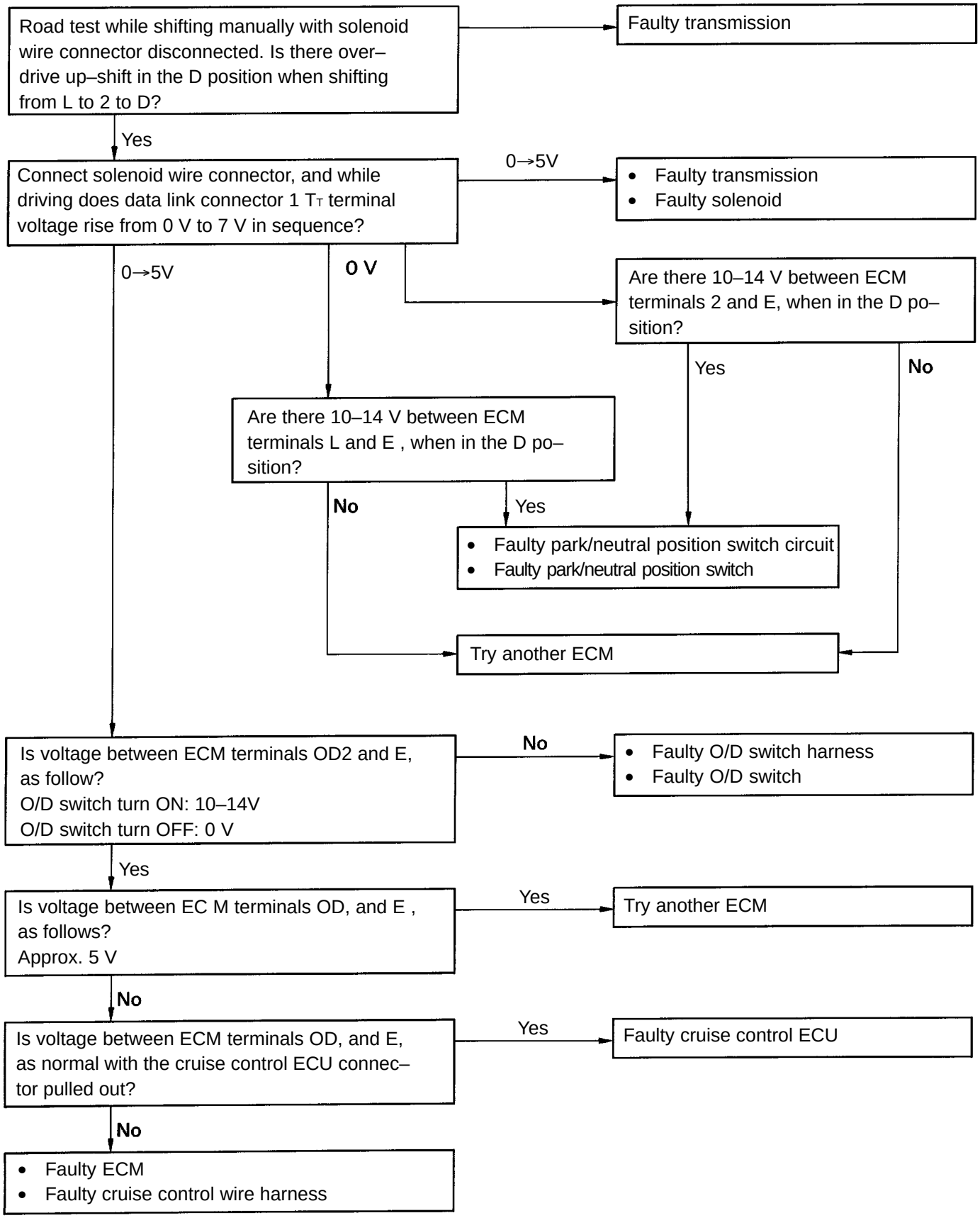

Trouble No.4 No lock–up (After warm–up)

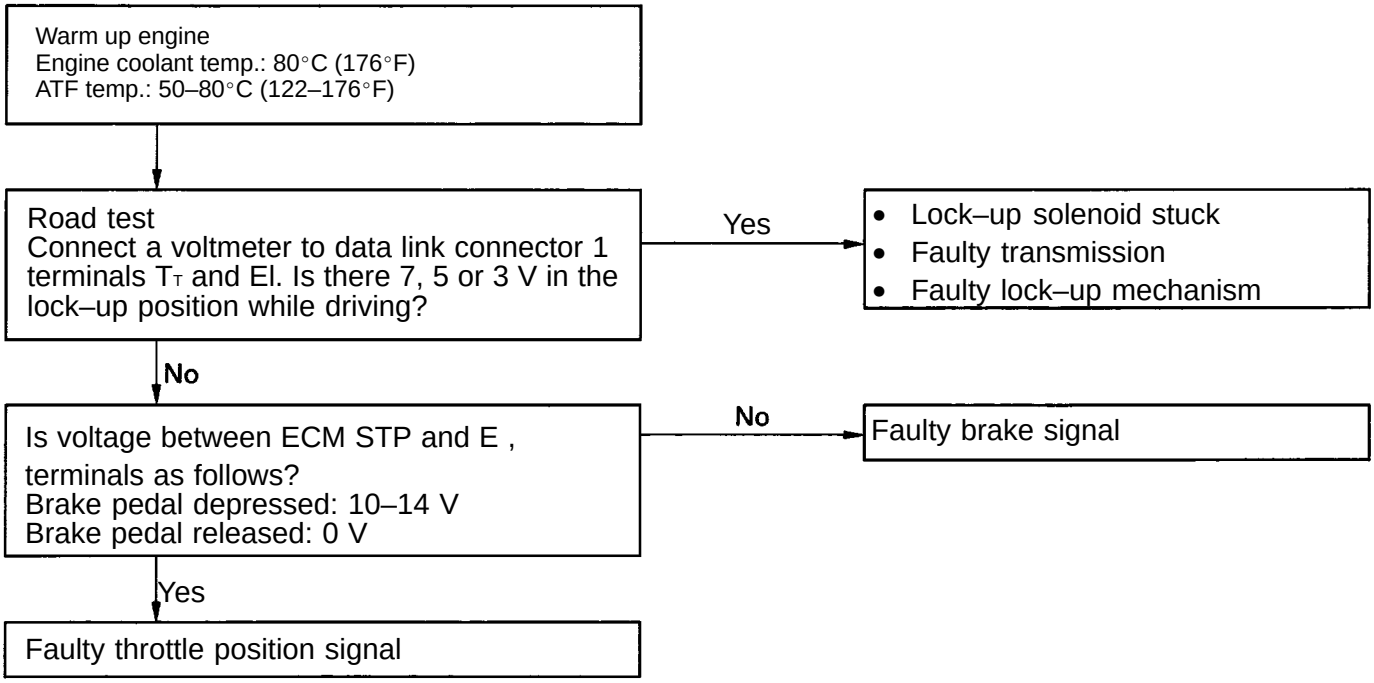

INSPECTION OF T_T TERMINAL VOLTAGE

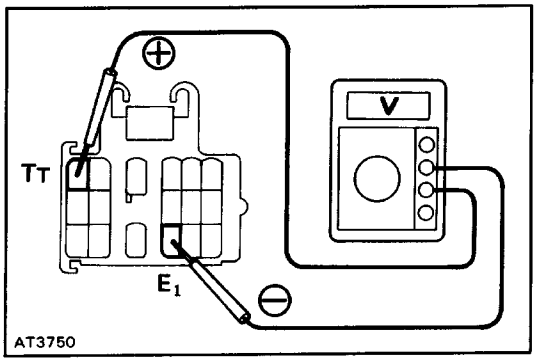

1. INSPECT THROTTLE POSITION SENSOR SIGNAL

(a) Turn the ignition switch to ON. Do not start the engine.

(b) Connect a voltmeter to data link connector 1 terminals T_T and El.

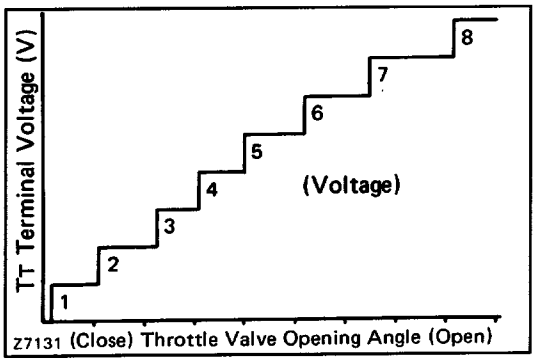

(c) While slowly depressing the accelerator pedal, check that T_T terminal voltage rises in sequence.
If the voltage does not change in proportion to the throttle opening angle, there is a malfunction in the throttle position sensor or circuit.

2. INSPECT BRAKE SIGNAL

(a) Depress the accelerator pedal until the T_T terminal indicates 8 V.

(b) Depress the brake pedal and check the voltage reading from the T_T terminal.

Brake pedal depressed ..... 0 V
Brake pedal released ..... 8 V

If not as indicated, there is a malfunction in either the stop light switch or circuit.

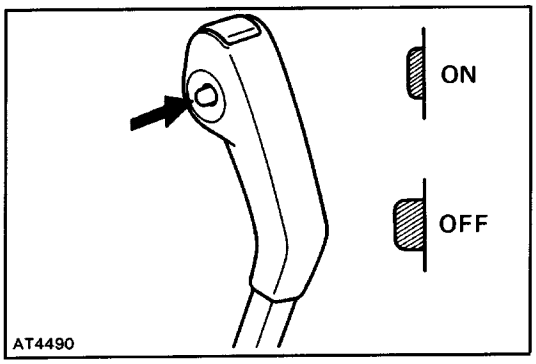

3. INSPECT EACH UP–SHIFT POSITION

(a) Warm up the engine.
Engine coolant temperature: 80 ° C (176 ° F)

(b) Turn the O/D switch to ”ON”.

(e) Place the pattern select switch in ”Normal” and the shift lever into the D position.

(d) During a road test (above 10 km/h or 6 mph)check that voltage at the T_T terminal is as indicated below for each up–shift position.
If the voltage rises from 0 V to 7 v in the sequence shown, the control system is okay.
The chart on the left shows the voltmeter reading and corresponding gears.

T_T Terminal (V)	Gear Position
0	1st
2	2nd
3	2nd Lock-up
4	3rd
5	3rd Lock-up
6	O/D
7	O/D Lock-up

HINT: Determine the gear position by a light shock or change in engine RPM when shifting. The lock–up clutch will turn ON only infrequently during normal 2nd and 3rd gear operation. To trigger this action, press the accelerator pedal to 50% or more of its stroke. At less than 50%, the voltage may change in the sequence 2 V–4 V–6 V–7V.

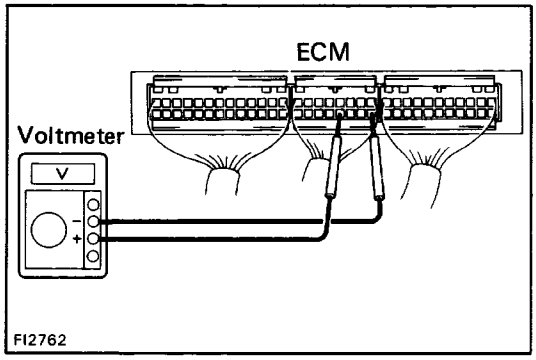

INSPECTION OF ELECTRONIC CONTROL COMPONENTS

1. INSPECT VOLTAGE OF ECM CONNECTOR

(a) Remove the cowl side trim of passenger side.

(b) Turn on the ignition switch.

(c) Measure the voltage at each terminal.

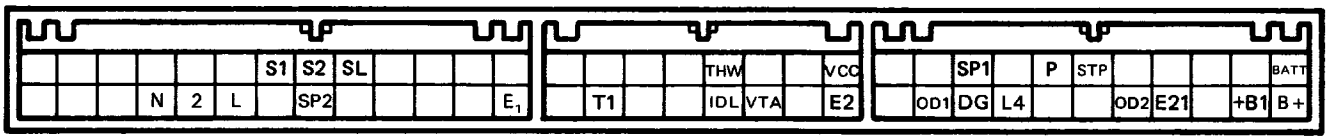

Terminal	Measuring condition		Voltage (V)
S_1 – E_1	–		10 – 14
S_2, S_L – E_1	–		0
P – E_1	PWR pattern		10 – 14
	NORM pattern		0 – 2
STP – E_1	Brake pedal is depressed		10 – 14
	Brake pedal is released		0
THW – E_2 (E_{21})	Engine coolant temp. 80°C (1 760F)		0.1 – 1.0
IDL – E_2 (E_{21})	Throttle valve fully closed		0
	Throttle valve open		10 – 14
VTA – E_2(E_{21})	Throttle valve fully closed		0.1 – 1.0
	Throttle valve fully open		3 – 5
VC (VCC) – E_2 (E_{21})	–		4 – 6
OD_1 – E_1	–		5
OD_2 – E_1	O/D main switch turned ON		10 – 14
	O/D main switch turned OFF		0
SP_1 – E_1	Cruise control main switch OFF	Standing still	0 or 5
		Vehicle moving	2 – 3
SP_2 – E_1	Standing still		0 or 5
	Vehicle moving		2 – 3

Terminal	Measuring condition	Voltage (V)
$N - E_1$	N position	10 – 14
	Except N position	0 – 2
$2 - E_1$	2 position	10 – 14
	Except 2 position	0 – 2
$L - E_1$	L position	10 – 14
	Except L position	0 – 2
$L_4 - E_1$	Transfer shift position H2 or H4	10 – 14
	Transfer shift position L4	0
$B+ (+B_1) - E_1$	–	10 – 14
$BATT - E_1$	–	10 – 14

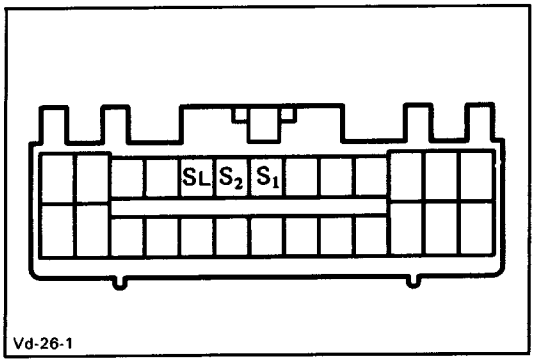

2. INSPECT SOLENOID

(a) Disconnect the connector from the ECM.

(b) Measure the resistance between S,, S2, SL and ground.
Resistance: 11–15Ω

(c) Apply battery voltage to each terminal. Check that an operation noise can be heard from the solenoid.

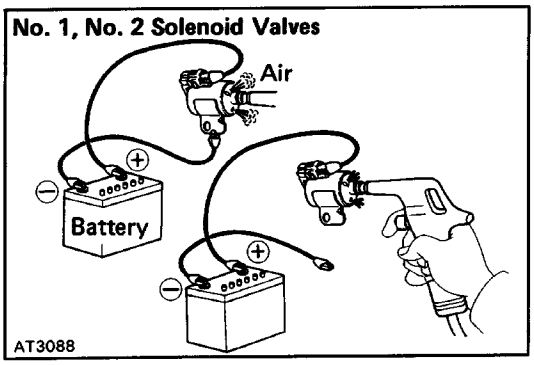

3. CHECK SOLENOID SEALS

If there is foreign material in the solenoid valve, there will be no fluid control even with solenoid operation.

(a) Check No. 1, No. 2 solenoid valves.
Check that the solenoid valves do not leak when low–pressure compressed air is applied.
When supply battery positive voltage to the sole–noids, check that the solenoid valves open.

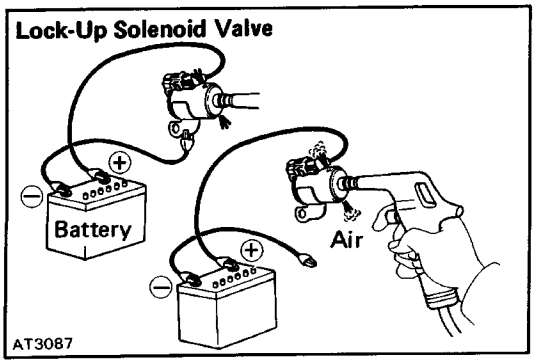

(b) Check the lock–up solenoid valve.
Applying 490 kPa (5 kgf/cm^2, 71 psi) of com–pressed air, check that the solenoid valve opens.
When supply battery positive voltage to the sole–noid, check that the solenoid valve does not leak the air.

If a malfunction is found during voltage inspection (step 1.), inspect the components listed below.

4. INSPECT PARK/NEUTRAL POSITION SWITCH

(See page AT–203)

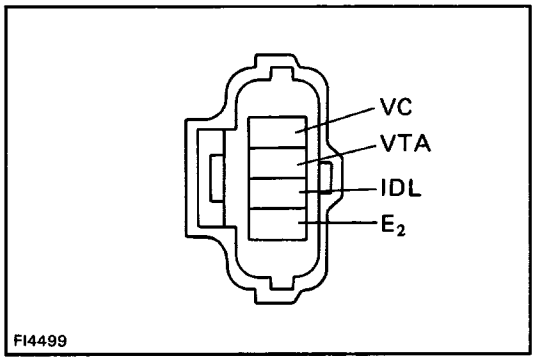

5. INSPECT THROTTLE POSITION SENSOR

Using an ohmmeter, check the resistance between each terminal.

Terminal	Throttle valve condition	Resistance (kΩ)
IDL–E2	Fully closed	Less than 2.3
	Open	Infinity
VC–E2	–	3.9 – 9.0
VTA–E2	Fully closed	0.47 – 6.1
	Fully open	3.1 – 12.1

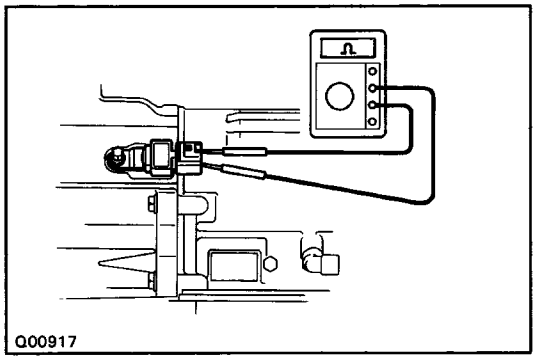

6. INSPECT NO.2 VEHICLE SPEED SENSOR

(a) Jack up the rear wheel on one side.

(b) Connect an ohmmeter between the terminals.

(e) Spin the wheel and check that the meter needle de–flects from OΩ to aoΩ.

7. INSPECT NO. 1 VEHICLE SPEED SENSOR

(See step 6. on page AT–194)

8. INSPECT PATTERN SELECT SWITCH

Using an ohmmeter, check the continuity of the terminals for each switch position.

HINT: As there are diodes inside, be careful of the tester probe polarity.

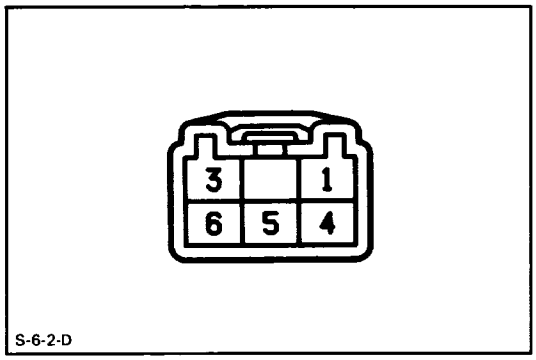

Pattern \ Terminal	4	6
PWR	○———	———○
NORM		

9. INSPECT O/D SWITCH

Using an ohmmeter, check the continuity of the terminals for each switch position.

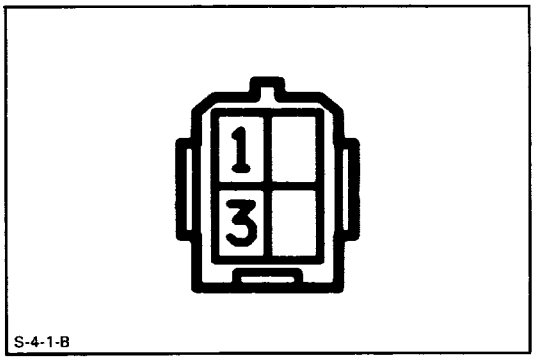

SW position \ Terminal	1	3
ON		
OFF	○———	———○

10. INSPECT ENGINE COOLANT TEMPERATURE SEN-SOR

(See page FI–115)

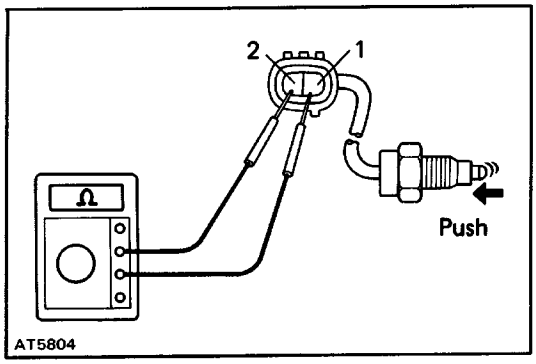

11. INSPECT TRANSFER POSITION SWITCH

Check that there is continuity between each terminal as shown.

Switch Position	Specified
Push	Continuity
Free	No continuity

If operation is not as specified, replace the switch.

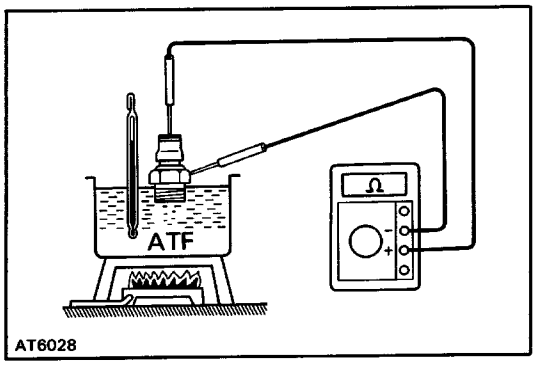

12. INSPECT TRANSMISSION FLUID TEMPERATURE SWITCH

Check that there is continuity at the temperature of 145°C–155°C (325°F–343°F).

If continuity is not as specified, replace the switch.

Mechanical System Tests

STALL TEST

The object of this test is to check the overall performance of the transmission and engine by measuring the stall speeds in the D and R positions.

NOTICE:

- **Perform the test at normal operating fluid temperature (50–80°C or 122–176°F).**
- **Do not continuously run this test longer than 5 seconds.**
- **To ensure safety, conduct this test in a wide, clear, level area, which provides good traction.**
- **The stall test should always be carried out in pairs. One should observe the conditions of wheels or wheel stoppers outside the vehicle while the other is performing the test.**

MEASURE STALL SPEED

(a) Check the front and rear wheels.

(b) Connect a tachometer to the engine.

(c) Fully apply the parking brake.

(d) Keep your left foot pressed firmly on the brake pedal.

(e) Start the engine.

(f) Shift into the D position. Step all the way down on the accelerator pedal with your right foot.
Quickly read the stall speed at this time.

NOTICE: Release the accelerator pedal and stop test if the rear wheels begin to rotate before the engine speed reaches specified stall speed.

Stall speed: 2,200 f 150 RPM

(g) Perform the same test in R position.

EVALUATION

(a) If the stall speed is the same for both positions but lower than specified value:
Engine output may be insufficient
Stator one–way clutch is not operating properly

HINT: If more than 600 RPM below the specified value, the torque converter clutch could be faulty.

(b) If the stall speed in D position is higher than specified:
Line pressure too low
Forward clutch slipping
No.2 one–way clutch not operating properly
O/D one–way clutch not operating properly

(c) If the stall speed in R position is higher than specified:
Line pressure too low
Direct clutch slipping
First and reverse brake slipping
O/D one–way clutch not operating properly

(d) If the stall speed in both R and D positions are higher than specified:
Line pressure too low
Improper fluid level
O/D one–way clutch not operating properly

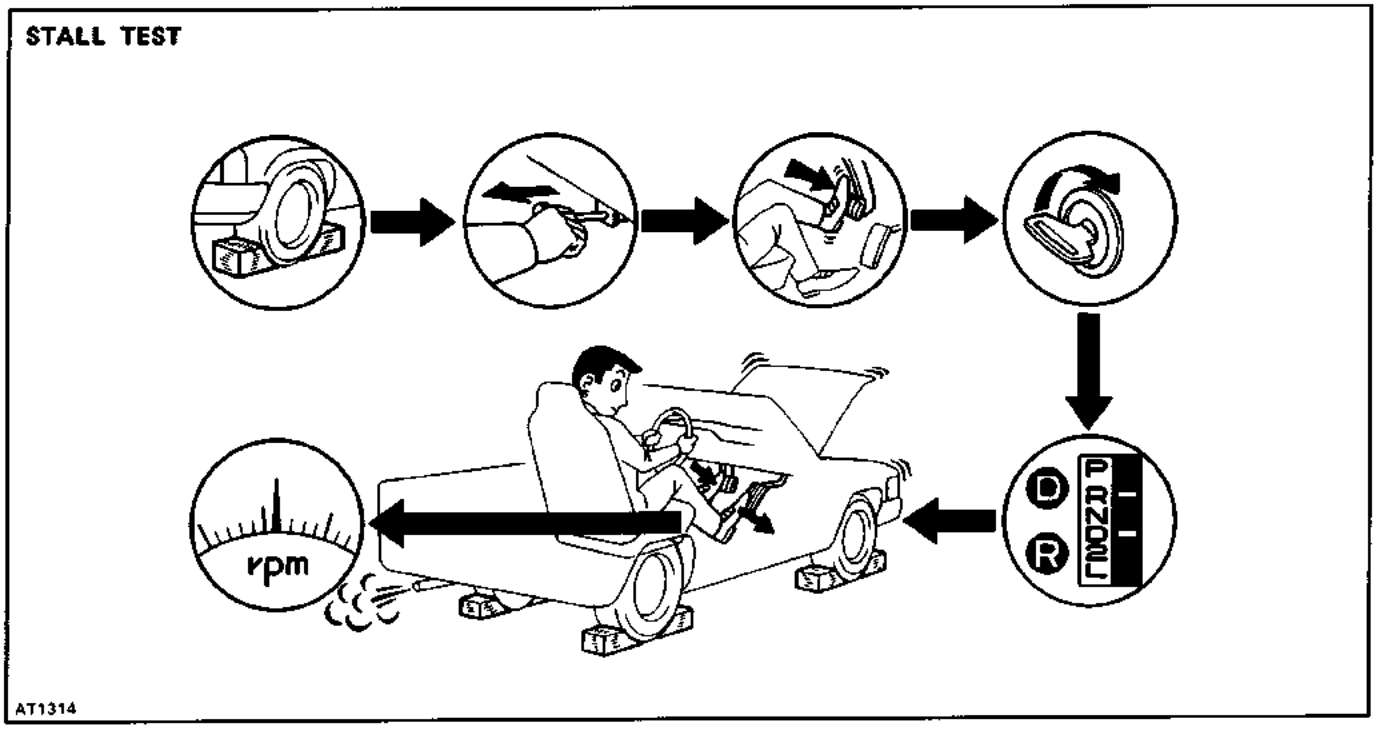

TIME LAG TEST

When the shift lever is shifted while the engine is idling, there will be a certain time lapse or lag before the shock can be felt. This is used for checking the condition of the 0!D direct clutch, forward clutch, direct clutch and first and reverse brake.

NOTICE:

- **Perform the test at normal operating fluid temperature (50–80°C or 122–176°F).**
- **Be sure to allow one minute interval between tests.**
- **Make three measurements and take the average value.**

MEASURE TIME LAG

(a) Fully apply the parking brake.

(b) Start the engine and check the idle speed.
Idle speed: 850 RPM
(N position)

(c) Shift the shift lever from N to D position. Using a stop watch, measure the time it takes from shifting the lever until the shock is felt.
Time lag: Less than 1.2 seconds

(d) In same manner, measure the time lag for N–R.
Time lag: Less than 1.5 seconds

EVALUATION

(a) If N–i D time lag is longer than specified:
Line pressure too low
Forward clutch worn
O/D one–way clutch not operating properly

(b) If N–R time lag is longer than specified:
Line pressure too low
Direct clutch worn
First and reverse brake worn
O/D one–way clutch not operating properly

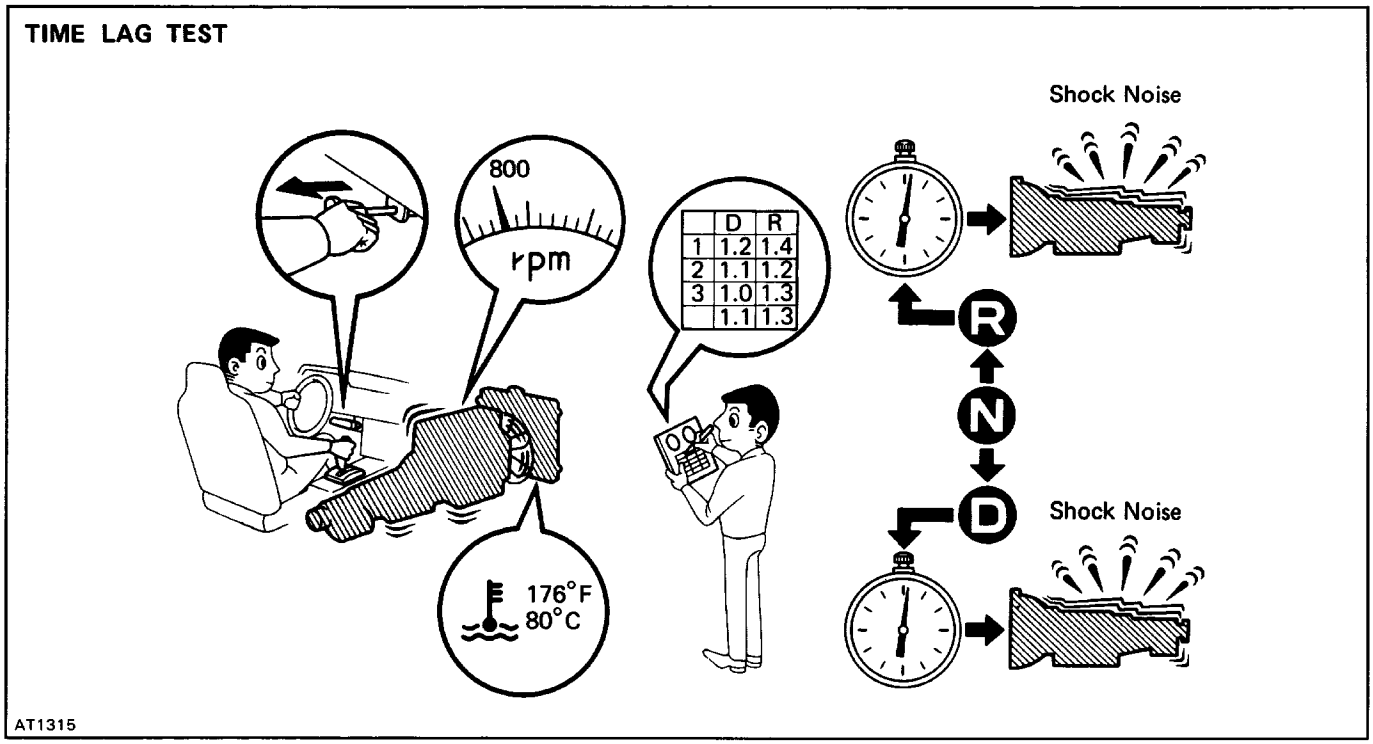

HYDRAULIC TEST

PREPARATION

(a) Warm up the transmission fluid.

(b) Remove the transmission case test plug and connect the hydraulic pressure gauge.
SST 09992–00094 (Oil pressure gauge)

NOTICE:

- **Perform the test at normal operating fluid temperature (50–80°C or 122–176°F).**
- **The line pressure test should always be carried out in pairs. One should observe the conditions of wheels or wheel stoppers outside the vehicle while the other is performing the test.**

M**EASURE LINE PRESSURE**

(a) Fully apply the parking brake and check the four wheels.

(b) Start the engine and check idling RPM.

(c) Keep your left foot pressed firmly on the brake pedal and shift into D position.

(d) Measure the line pressure when the engine is idling.

(e) Press the accelerator pedal all the way down. Quickly read the highest line pressure when engine speed reaches stall speed.

NOTICE: Release the accelerator pedal and stop test if the rear wheels begin to rotate before the en–
gine speed reaches specified stall speed.

(f) In the same manner, perform the test in R position.

kPa (kgf/cm^2, psi)

D position		R position	
Idling	Stall	Idling	Stall
363 – 422	932 – 1,177	490 – 588	1,294 – 1,638
(3.7 – 4.3, 53 – 61)	(9.5 – 12.0, 135 – 171)	(5.0 – 6.0, 71 – 85)	(13.2 – 16.7, 188 – 238)

If the measured pressures are not up to specified values, recheck the throttle cable adjustment and perform a retest.

EVALUATION

(a) If the measured values at all positions are higher than specified:
Throttle cable out of adjustment
Throttle valve defective
Regulator valve defective

(b) If the measured values at all positions are lower than specified:
Throttle cable out of adjustment
Throttle valve defective
Regulator valve defective
Oil pump defective
O/D direct clutch defective

(c) If pressure is low in the D position only:
D position circuit fluid leakage
Forward clutch defective

(d) If pressure is low in the R position only:
R position circuit fluid leakage
Direct clutch defective
First and reverse brake defective

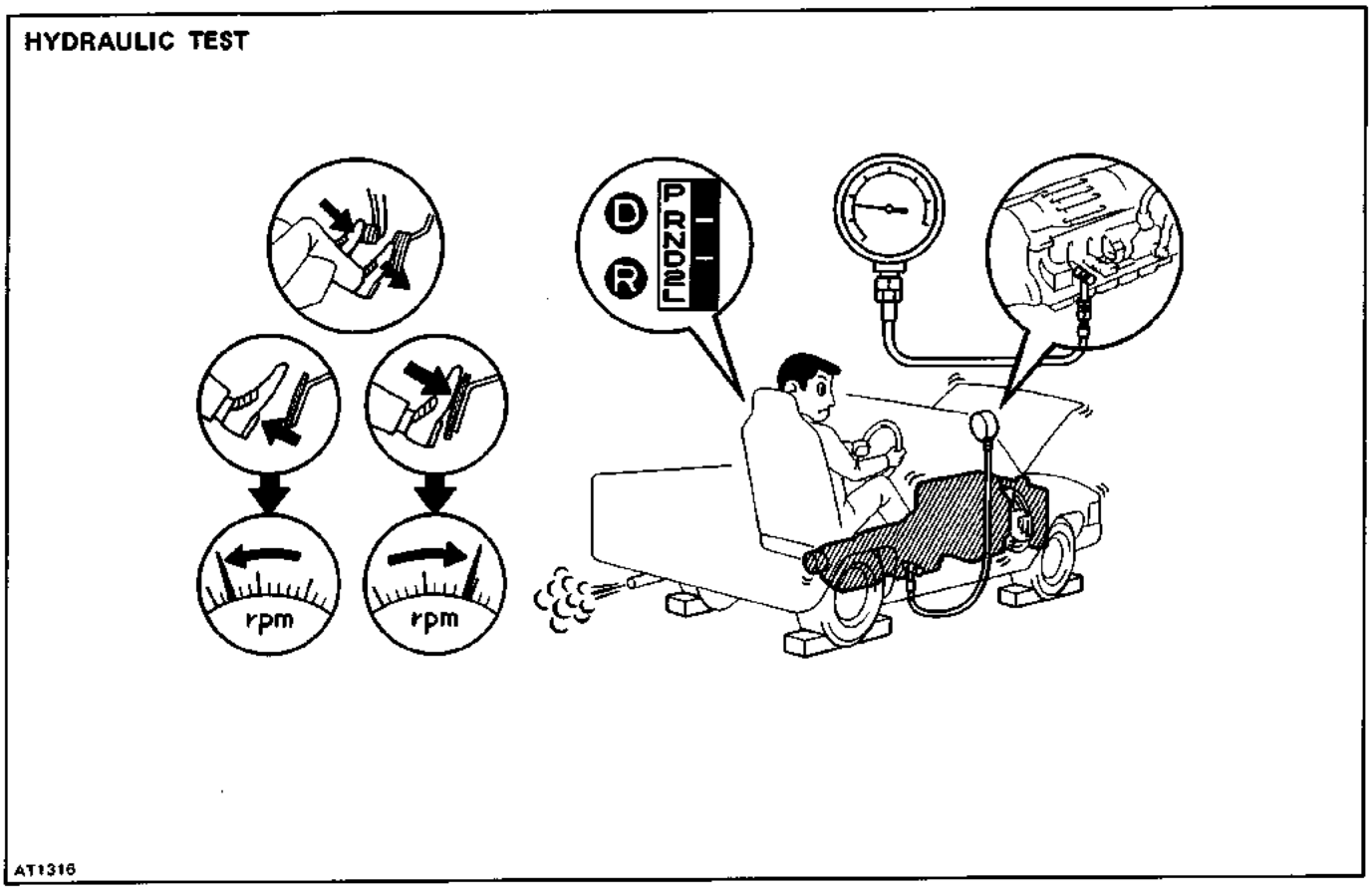

ROAD TEST

NOTICE: Perform the test at normal operating fluid temperature (50–800C or 122–1760F).

1. D POSITION TEST IN NORM AND PWR PATTERN POSITIONS

Shift into the D position and hold the accelerator pedal constant at the full throttle valve opening position.

(a) 1–2, 2–3 and 3–OlD up–shifts should take place, and shift points should conform to those shown in the automatic shift schedule.
Conduct a test under both Normal and Power patterns.

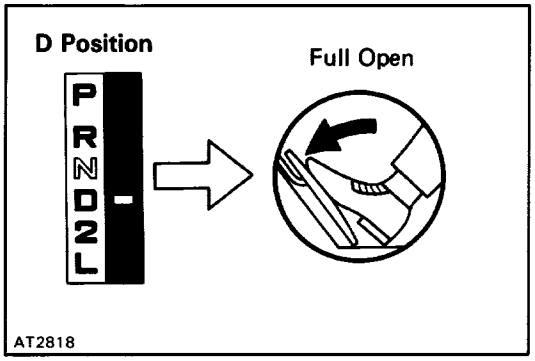

HINT: There is no O/D up–shift or lock–up when the engine coolant temp. is below 70°C (158°F).

EVALUATION

(1) If there is no 1 → 2 up–shift:
No.2 solenoid is stuck
1–2 shift valve is stuck

(2) If there is no 2 → 3 up–shift:
No.1 solenoid is stuck
2–3 shift valve is stuck

(3) If there is no 3 → O/D up–shift:
3–4 shift valve is stuck

(4) If the shift point is defective:
Throttle valve, 1–2 shift valve, 2–3 shift valve, 3–4 shift valve etc., are defective

(5) If the lock–up is defective:
Lock–up solenoid is stuck
Lock–up relay valve is stuck

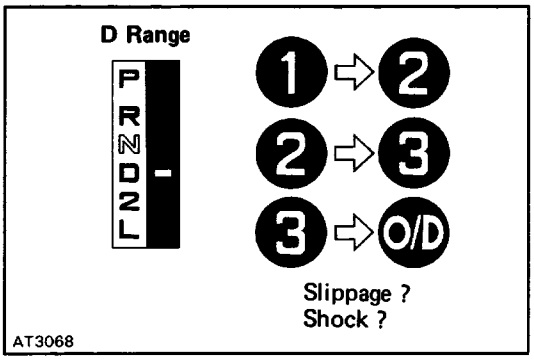

(b) In the same manner, check the shock and slip at the 1 → 2, 2 → 3, and 3 → O/D up–shifts.
EVALUATION

If the shock is excessive:

- Line pressure is too high
- Accumulator is defective
- Check ball is defective

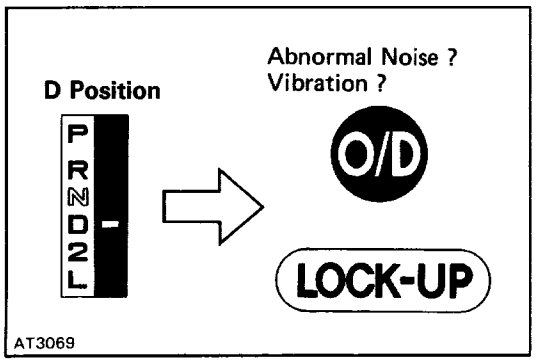

(c) Run at the D position lock–up or O/D gear and check for abnormal noise and vibration.

HINT: The check for the cause of abnormal noise and vibration must be made with extreme care as it could also be due to loss of balance in the propeller shaft, differential, torque converter clutch, etc.

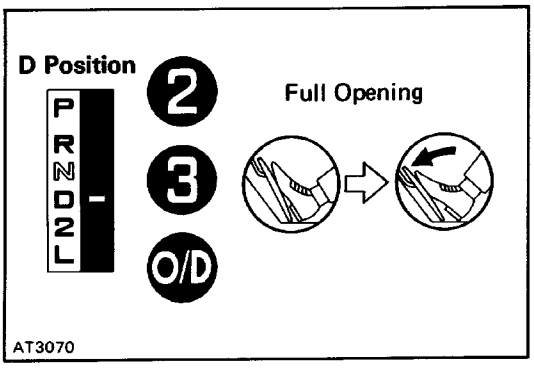

(d) While running in the D position, 2nd, 3rd and O/D gears, check to see that the possible kick–down vehicle speed limits for 2→1, 3→2 and O/D→ 3 kick–downs conform to those indicated on the automatic shift schedule.

(e) Check for abnormal shock and slip at kick–down.

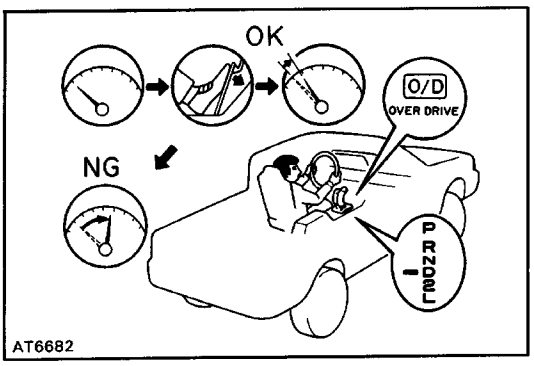

(f) Check for the lock–up mechanism.

(1) Drive in D position, O/D gear, at a steady speed (lock–up ON) of about 75kmlh (47mph).

(2) Lightly depress the accelerator pedal and check that the engine RPM does not change abruptly.

If there is a big jump in engine rpm, there is no lock–up.

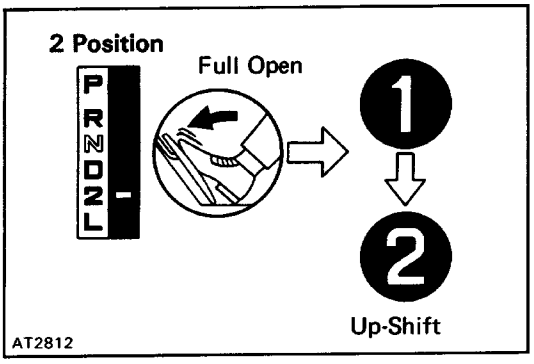

2. 2 POSITION TEST

Shift into the 2 position and, while driving with the accel–erator pedal held constantly at the full throttle valve opening position, push in one of the pattern selectors and check on the following points.

(a) Check to see that the 1 → 2 up–shift takes place and that the shift point conforms to it shown on the au–tomatic shift schedule.

HINT:

There is no O/D up–shift and lock–up in the 2 position.

To prevent overrun, the transmission up–shifts into 3rd gear at around 100 km/h (62 mph) or more.

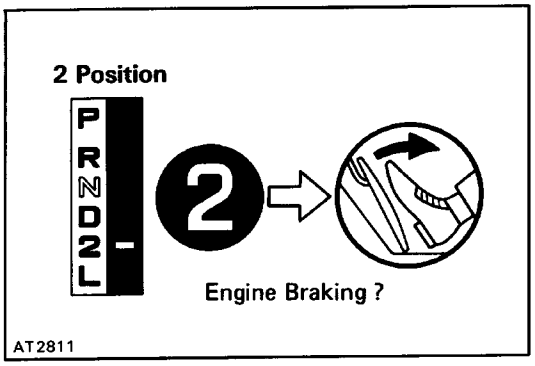

(b) While running in the 2 position and 2nd gear, release the accelerator pedal and check the engine braking effect.

EVALUATION

If there is no engine braking effect:

Second coast brake is defective

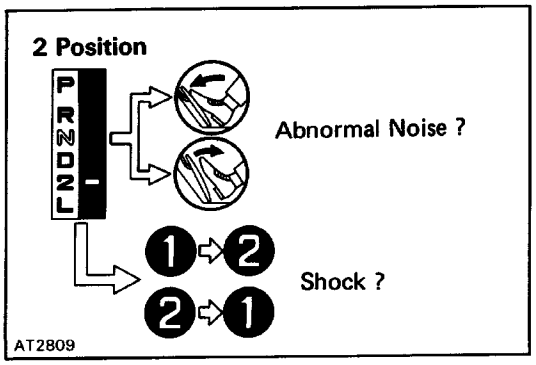

(c) Check for abnormal noise at acceleration and decel-eration, and for shock at up–shift and down–shift.

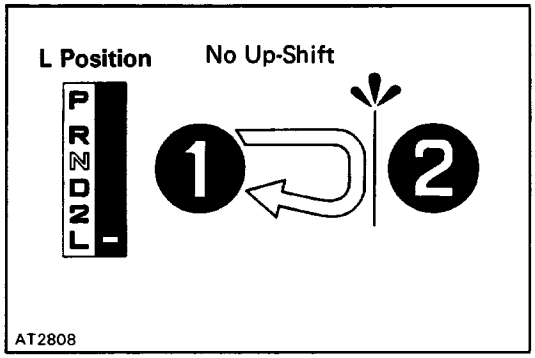

3. L POSITION TEST

(a) While running in the L position, check to see that there is no up–shift to 2nd gear.

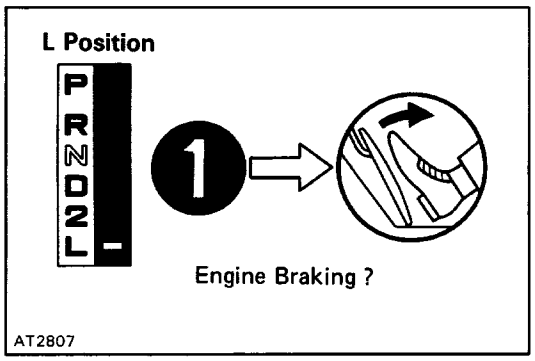

(b) While running in the L position, release the accelerator pedal and check the engine braking effect.

EVALUATION

If there is no engine braking effect:

- First and reverse brake is defective

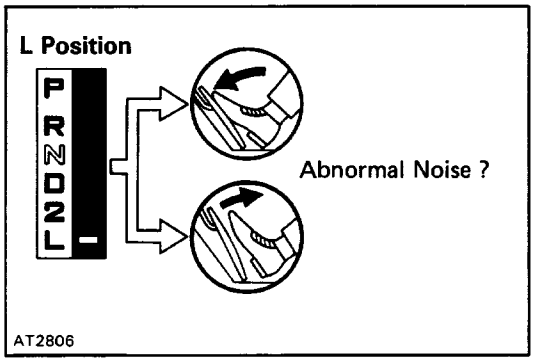

(c) Check for abnormal noise during acceleration and deceleration.

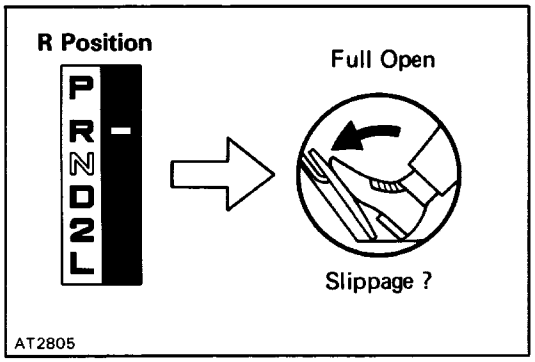

4. R POSITION TEST

Shift into the R position and, while starting at wide open throttle, check for slipping.

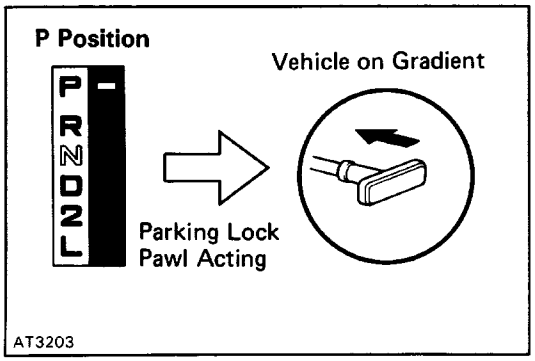

5. P POSITION TEST

Stop the vehicle on a gradient (more than 50) and after shifting into the P position, release the parking brake. Then check to see that the parking lock pawl holds the vehicle in place.

Automatic Shift Schedule

		Throttle valve fully open [ ] Fully closed km/h (mph)							
		1→2	2→3	3→O/D	[3→O/D]	[O/D→3]	O/D→3	3→2	2→1
D position	NORM	44–48 (27–30)	93–99 (58–61)	134–141 (83–87)	35–39 (22–24)	21–25 (13–16)	128–135 (79–84)	87–94 (54–58)	40–43 (25–27)
	PW R	47–51 (29–32)	93–99 (58–61)	148–155 (92–96)	50–53 (31–33)	21–25 (13–16)	143–149 (89–92)	87–94 (54–58)	41–45 (25–28)
2 position	NORM PW R	43–46 (27–29)	103–109 (64–68)	–	–	–	–	97–103 (60–64)	38–42 (24–26)
L position	NORM PW R	–	–	–	–	–	–	82–89 (51–55)	47–51 (29–32)

		Throttle valve opening 5% km/h (mph)					
		Lock–up ON			Lock–up OFF		
		2nd	*3rd	O/D	2nd	*3rd	O/D
D position	NORM	–	41 – 45 (25 – 28)	59 – 63 (37 – 39)	–	38 – 42 (24 – 26)	55 – 59 (34 – 37)
	PWR	–	55 – 59 (34 – 37)	75 – 79 (47 – 49)	–	50 – 53 (31 – 33)	70 – 73 (43 – 45)

* : O/D switch OFF

HINT:

(1) Lock–up will not occur in 2nd gear unless the throttle valve opening is greater than 50%.
(2) There is no lock–up in the 2 and L positions.
(3) In the following cases, the lock–up will be released regardless of the lock–up pattern.
When the throttle is completely closed.
When the brake light switch is ON.

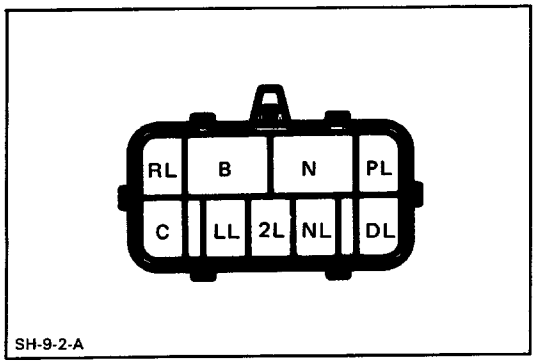

Park/Neutral Position Switch

INSPECTION OF PARK/NEUTRAL POSITION SWITCH

Inspect that there is continuity between each terminals.

Shift Position \ Terminal	B	N	PL	RL	NL	DL	2L	LL	C
P	○	○	○						○
R				○					○
N	○	○			○				○
D						○			○
2							○		○
L								○	○

Automatic Shift Schedule

		Throttle valve fully open			[ ] Fully closed			km/h (mph)	
		1→2	2→3	3→O/D	[3→O/D]	[O/D→3]	O/D→3	3→2	2→1
D position	NORM	44–48 (27–30)	93–99 (58–61)	134–141 (83–87)	35–39 (22–24)	21–25 (13–16)	128–135 (79–84)	87–94 (54–58)	40–43 (25–27)
	PW R	47–51 (29–32)	93–99 (58–61)	148–155 (92–96)	50–53 (31–33)	21–25 (13–16)	143–149 (89–92)	87–94 (54–58)	41–45 (25–28)
2 position	NORM PW R	43–46 (27–29)	103–109 (64–68)	–	–	–	–	97–103 (60–64)	38–42 (24–26)
L position	NORM PW R	–	–	–	–	–	–	82–89 (51–55)	47–51 (29–32)

		Throttle valve opening 5%					km/h (mph)
		Lock–up ON			Lock–up OFF		
		2nd	*3rd	O/D	2nd	*3rd	O/D
D position	NORM	–	41 – 45 (25 – 28)	59 – 63 (37 – 39)	–	38 – 42 (24 – 26)	55 – 59 (34 – 37)
	PWR	–	55 – 59 (34 – 37)	75 – 79 (47 – 49)	–	50 – 53 (31 – 33)	70 – 73 (43 – 45)

* : O/D switch OFF

HINT:

(1) Lock–up will not occur in 2nd gear unless the throttle valve opening is greater than 50%.
(2) There is no lock–up in the 2 and L positions.
(3) In the following cases, the lock–up will be released regardless of the lock–up pattern.
When the throttle is completely closed.
When the brake light switch is ON.

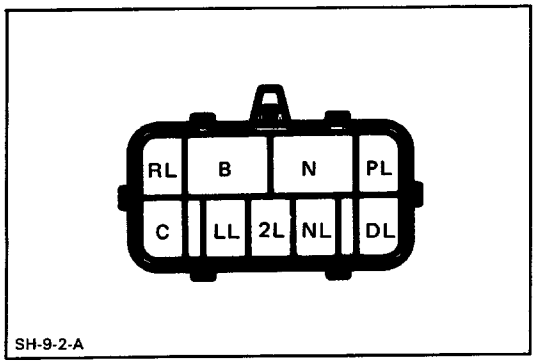

Park Neutral Position Switch

INSPECTION OF PARK/NEUTRAL POSITION SWITCH

Inspect that there is continuity between each terminals.

Shift Position \ Terminal	B	N	PL	RL	NL	DL	2L	LL	C
P	○	○	○						○
R				○					○
N	○	○			○				○
D						○			○
2							○		○
L								○	○

ON–VEHICLE REPAIR
Valve Body
REMOVAL OF VALVE BODY

1. CLEAN TRANSMISSION EXTERIOR

To prevent contamination, clean the exterior of the transmission.

2. DRAIN TRANSMISSION FLUID

Remove the drain plug and the fluid into a suitable container.

3. REMOVE OIL PAN

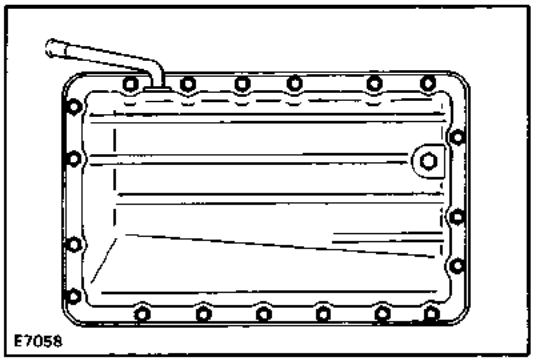

NOTICE: Some fluid will remain in the oil pan . Be careful not to damage the filler tube and O–ring.

(a) Remove the nineteen bolts.

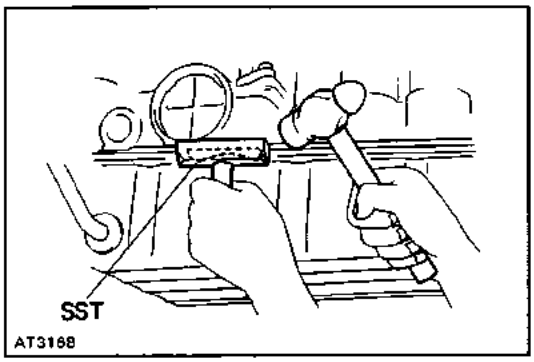

(b) Install the blade of SST between the transmission case and oil pan, cut off applied sealer and then remove the oil pan.

SST 09032–00 100

NOTICE: When removing the oil pan, be careful not to damage the oil pan flange.

4. REMOVE OIL STRAINER AND GASKETS

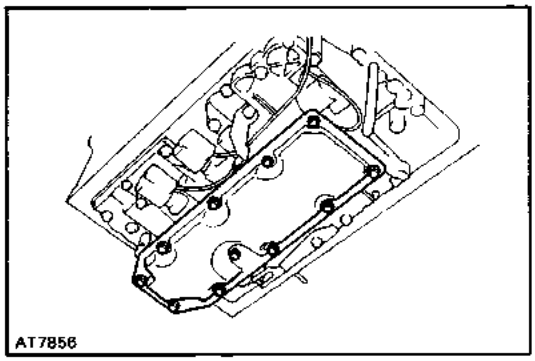

(a) Remove the eleven bolts holding the oil strainer to the oil strainer case.

(b) Remove the oil strainer and gasket.

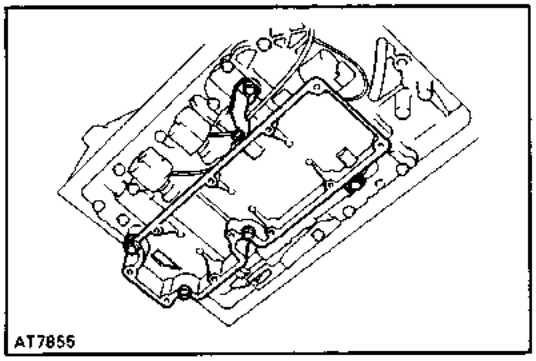

(c) Remove the five bolts and oil strainer case.

(d) Remove the two gaskets from the case.

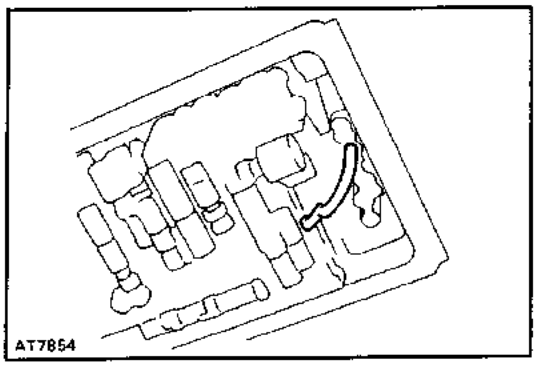

5. REMOVE OIL TUBE

Pry up both tube ends with a large screwdriver and re–move the tube.

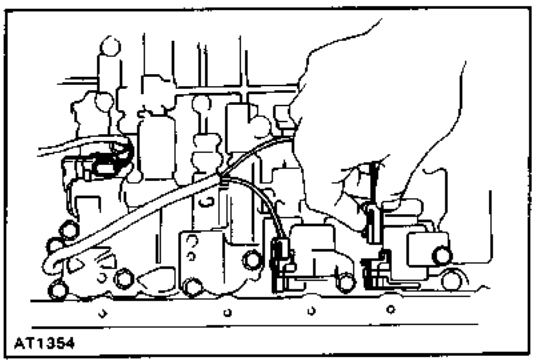

6. REMOVE SOLENOID WIRING

(a) Disconnect the three connectors from No.1, No.2 and lock–up solenoids.

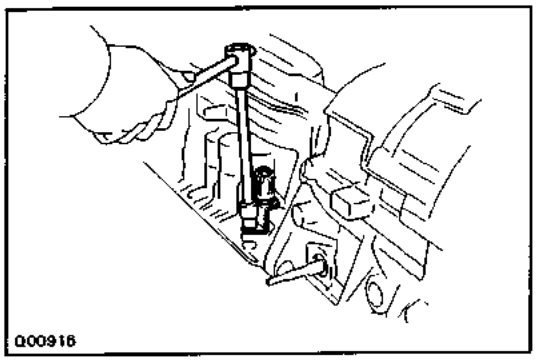

(b) Remove the stopper plate from the case.

(c) Pull out the solenoid wiring from the transmission case.

(d) Remove the O–ring from the grommet.

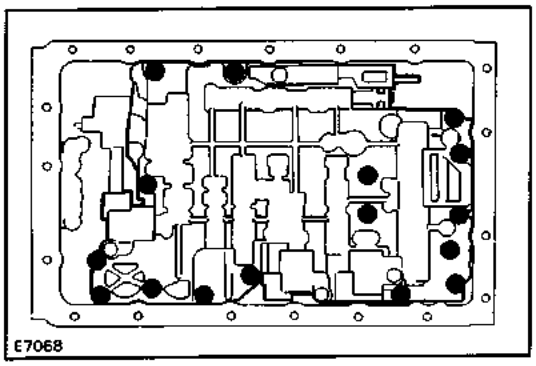

7. REMOVE VALVE BODY

(a) Remove the sixteen bolts.

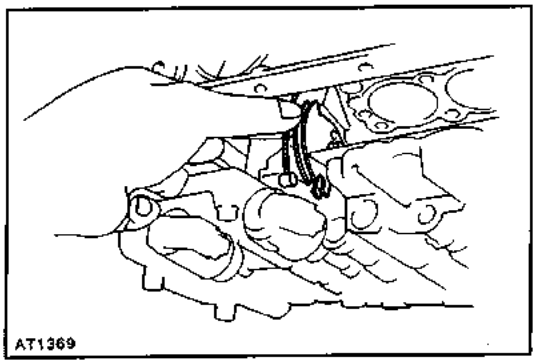

(b) Disconnect the throttle cable from the cam and re–move the valve body.

INSTALLATION OF VALVE BODY

1. CONNECT THROTTLE CABLE TO CAM

Push the cable fitting into the cam.

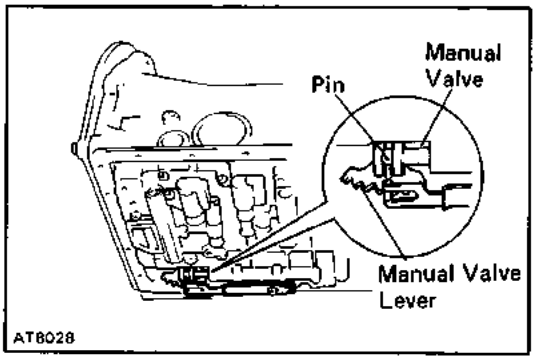

2. INSTALL VALVE BODY

(a) Align the manual valve lever with the manual valve.

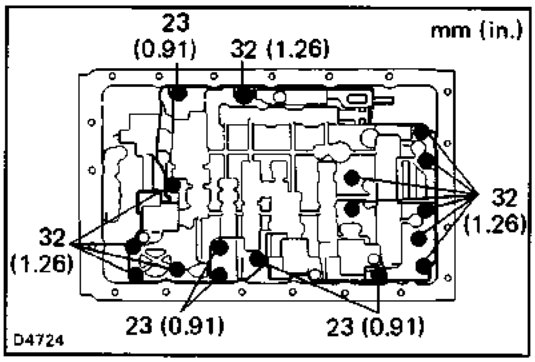

(b) Finger tighten the all bolts first. Then tighten the bolts evenly.

HINT: Each bolt length (mm, in.) is indicated in the figure.

Torque: 10 N–m (100 kgf–cm, 7 ft–lbf)

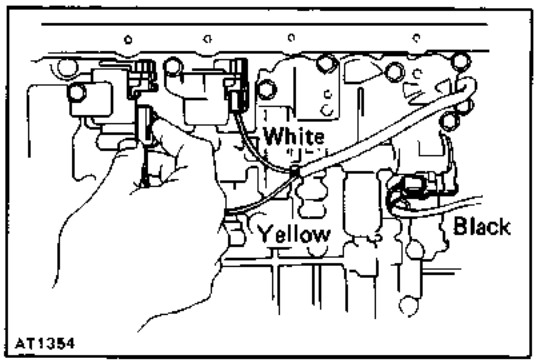

3. CONNECT SOLENOID WIRING

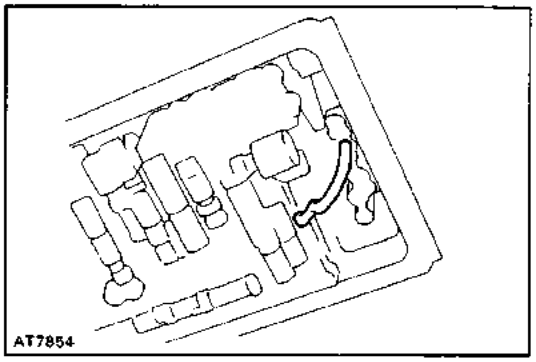

4. INSTALL OIL TUBE

Tap the tubes with a plastic hammer to install the tube into the position shown in the figure.

NOTICE: Be careful not to bend or damage the tube.

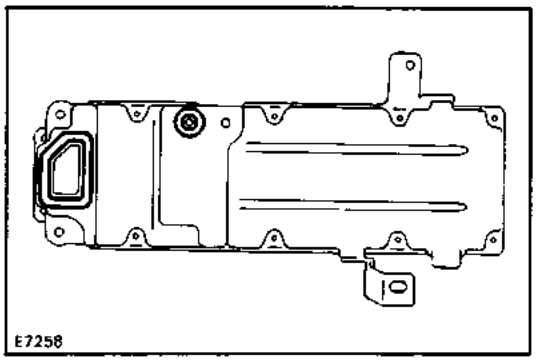

5. INSTALL OIL STRAINER AND GASKETS

(a) Install two new gaskets to the oil strainer case.

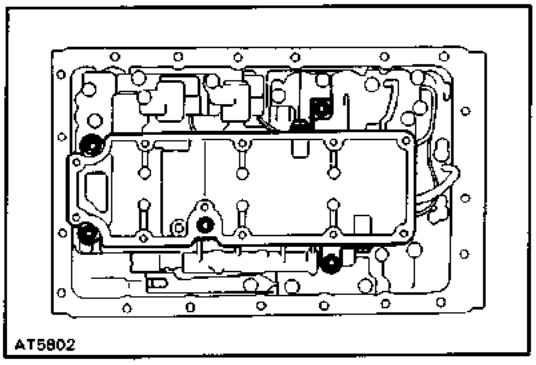

(b) Install the oil strainer case and torque the five bolts.
Torque: 10 N–m (100 kgf–cm, 7 ft–lbf)

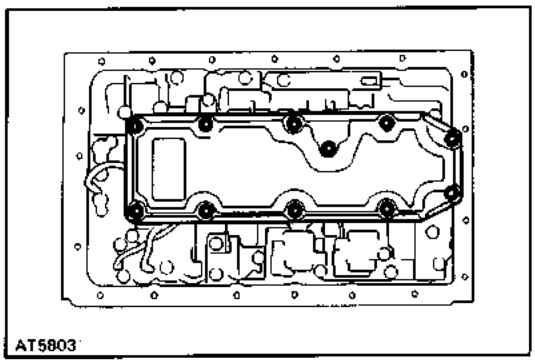

(c) Install a new gasket to the oil strainer case.
(d) Install the oil strainer and torque the eleven bolts.

Torque: 6.9 IV –m (70 kgf –cm, 61 in. –lbf)

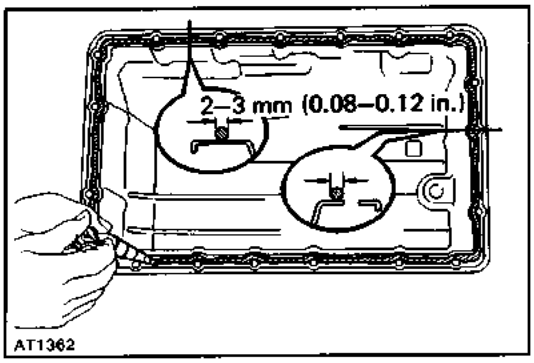

6. INSTALL OIL PAN

(a) Remove any packing material and be careful not to drop oil on the contacting surfaces of the transmis–sion case and oil pan.

(b) Apply seal packing to the oil pan shown in the fig–ure.
Seal packing: Part No. 08826–00090, THREE BOND 1281 or equivalent

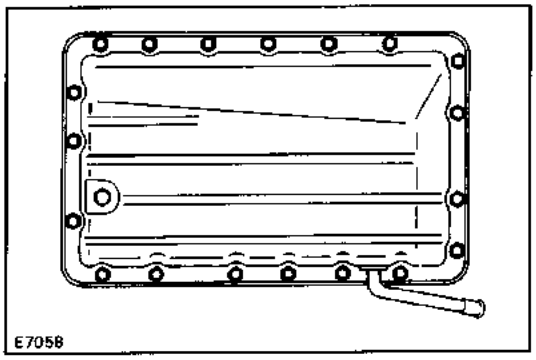

(c) Install and torque the nineteen bolts.

Torque: 7.4 N–m (75 kgf–cm, 65 in.–lbf)

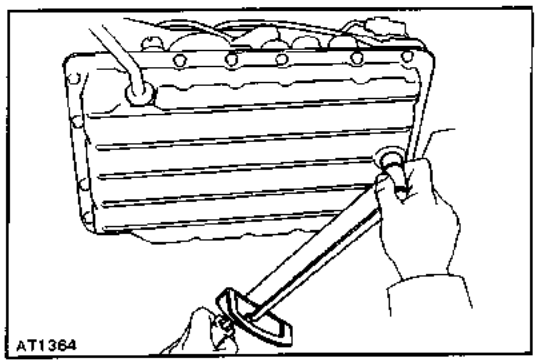

7. INSTALL DRAIN PLUG

Torque the drain plug.

Torque: 20 N–m (205 kgf–cm, 15 ft–lbf)

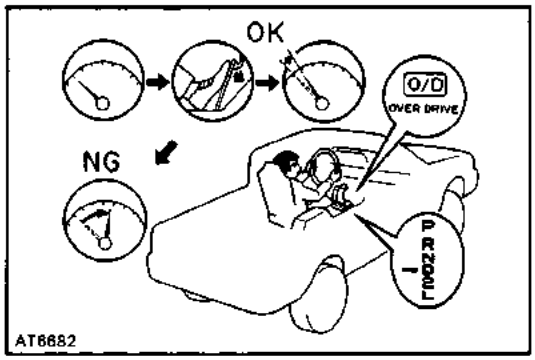

8. FILL TRANSMISSION WITH ATF

Add only about two liters of ATF. Start the engine and shift through all the positions. Check the fluid level and add as necessary.

NOTICE: Do not overfill.

Fluid type: ATF DEXRON°II

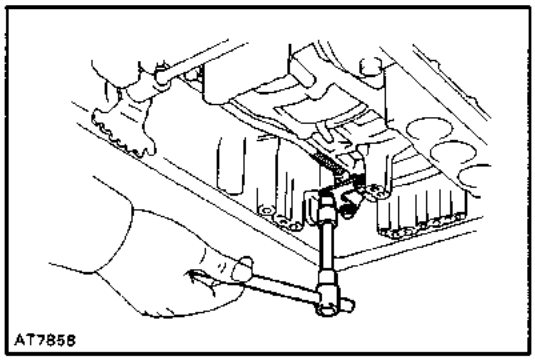

Parking Lock Pawl

REMOVAL OF PARKING LOCK PAWL

1. REMOVE VALVE BODY (See page AT–204)

2. REMOVE PARKING LOCK PAWL BRACKET

Remove the three bolts and the bracket.

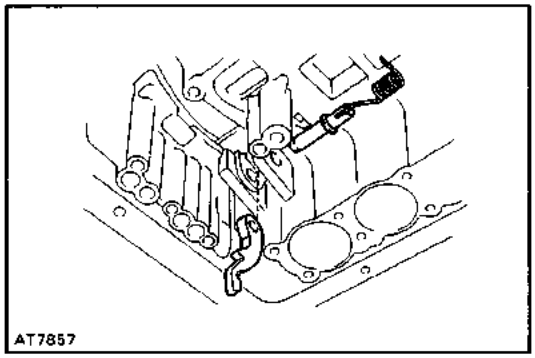

3. REMOVE SPRING FROM PARKING LOCK PAWL PIVOT PIN

4. REMOVE PIVOT PIN AND PARKING LOCK PAWL

INSTALLATION OF PARKING LOCK PAWL

1. INSTALL PARKING LOCK PAWL AND PIVOT PIN

2. INSTALL SPRING

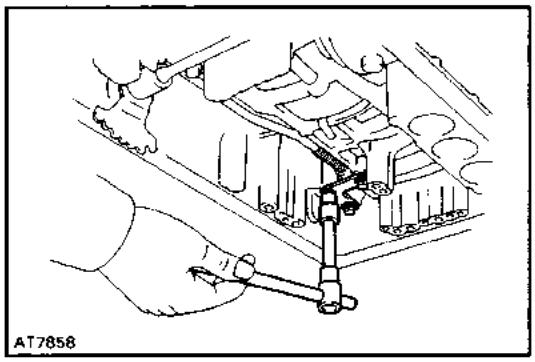

3. INSTALL PARKING LOCK PAWL BRACKET

(a) Push lock rod fully toward.

(b) Install the three bolts finger tight.

(c) Check that the pawl operates smoothly.

(d) Torque the bolts.

Torque: 7.4 N–m (75 kgf–cm, 65, in.–lbf)

4. INSTALL VALVE BODY (See page AT–204)

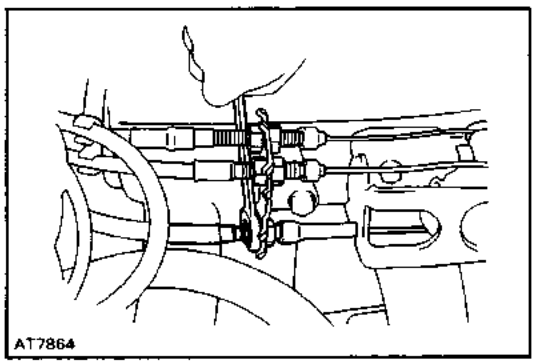

Throttle Cable

REMOVAL OF THROTTLE CABLE

1. DISCONNECT THROTTLE CABLE

Disconnect the cable from the throttle linkage.

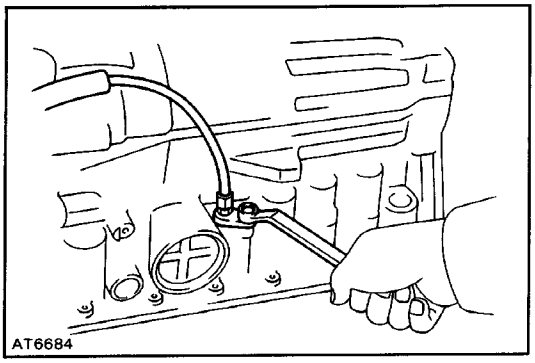

2. REMOVE VALVE BODY (See page AT–204)

3. PUSH THROTTLE CABLE OUT OF TRANSMISSION CASE

Remove the retaining bolt and pull out the throttle cable.

INSTALLATION OF THROTTLE CABLE

1. INSTALL CABLE IN TRANSMISSION CASE

Install the retaining bolt and push in the throttle cable.

2. INSTALL VALVE BODY (See page AT–205)

3. IF THROTTLE CABLE IS NEW, STAKE STOPPER ON INNER CABLE

(a) Pull the inner cable lightly until a slight resistance is felt, and hold it.

(b) Stake the stopper as shown, 0.8 – 1.5 mm (0.031 – 0.059 in.) in width.

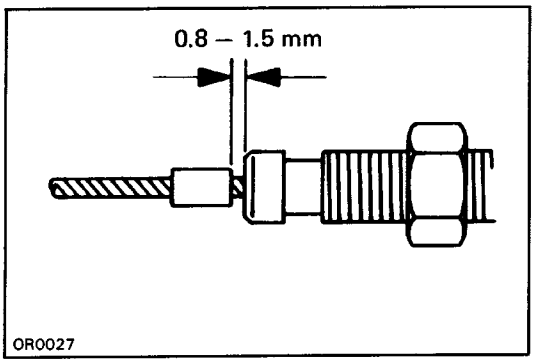

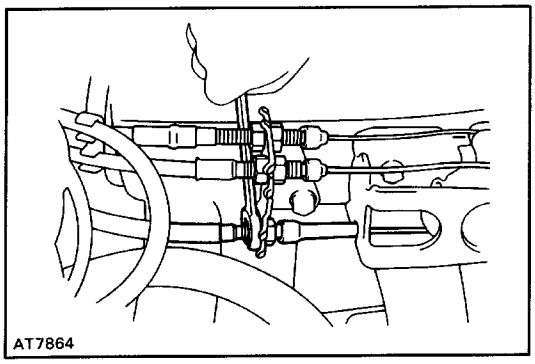

4. CONNECT THROTTLE CABLE

5. ADJUST THROTTLE CABLE (See page AT–182)

6. TEST DRIVE VEHICLE

REMOVAL AND INSTALLATION OF TRANSMISSION

Remove and Install the parts as shown.

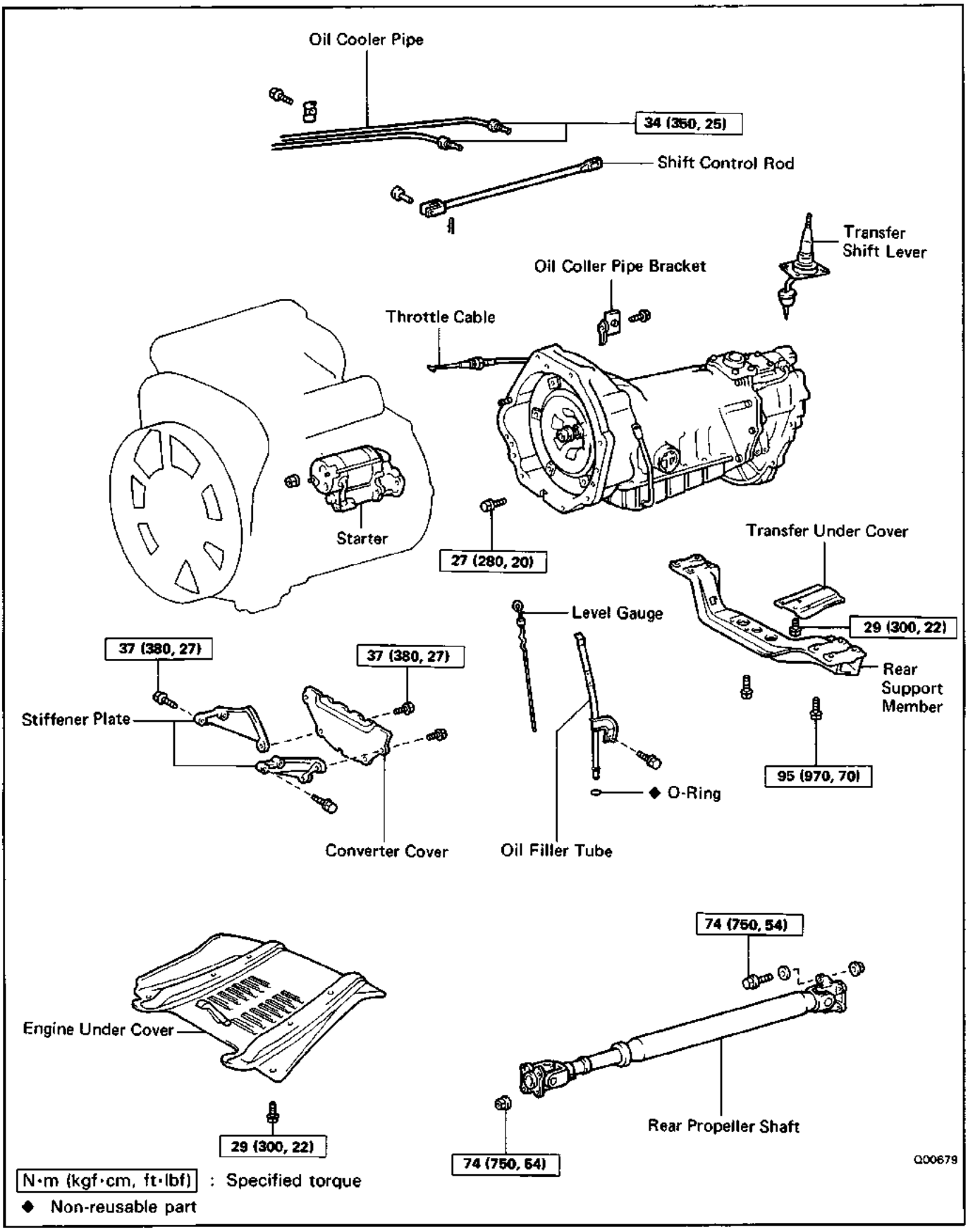

(Cont'd)

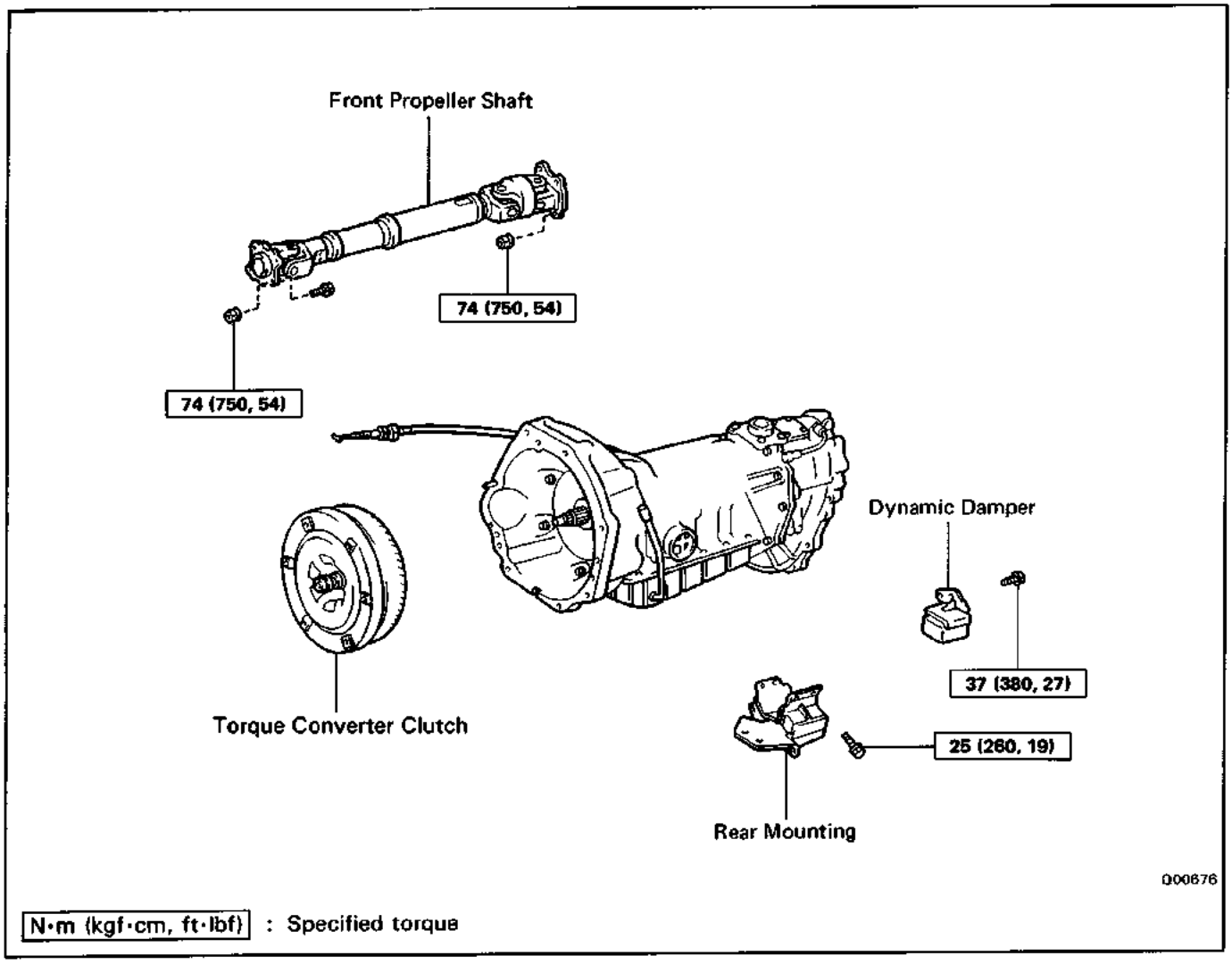

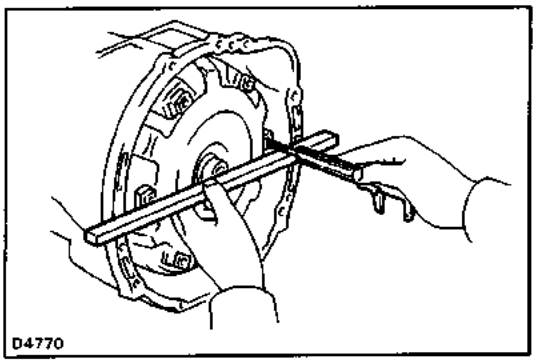

(MAIN POINT OF INSTALLATION)

1. CHECK TORQUE CONVERTER CLUTCH INSTALLATION

Using calipers and a straight edge, measure from the in–stalled surface of the torque converter clutch to the front surface of the transmission housing.

Correct distance: 20.0 mm (0.787 in.)

If the distance is less than the standard, check for an im–proper installation.

2. ADJUST TRANSMISSION THROTTLE CABLE

(See page AT–182)

3. FILL TRANSMISSION WITH ATF AND CHECK FLUID LEVEL

Fluid type: ATF DEXRON® II

NOTICE: Do not overfill.

TORQUE CONVERTER CLUTCH AND DRIVE PLATE

INSPECTION OF TORQUE CONVERTER CLUTCH AND DRIVE PLATE

1. INSPECT ONE–WAY CLUTCH

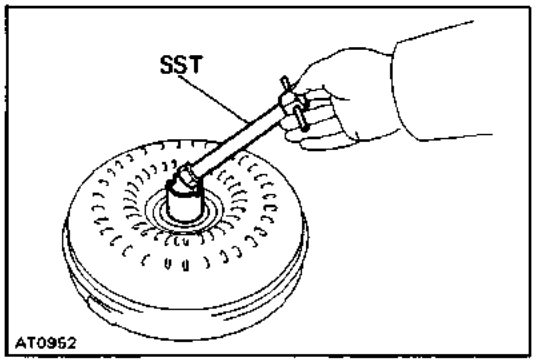

(a) Install SST into the inner race of the one–way clutch.
SST 09350–30020 (09351–32010)

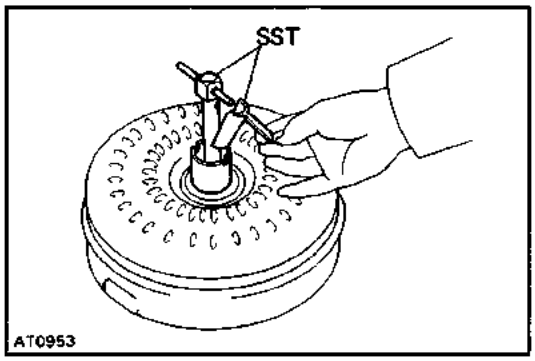

(b) Install SST so that it fits in the notch of the converter hub and outer race of the one–way clutch.
SST 09350–30020 (09351–32020)

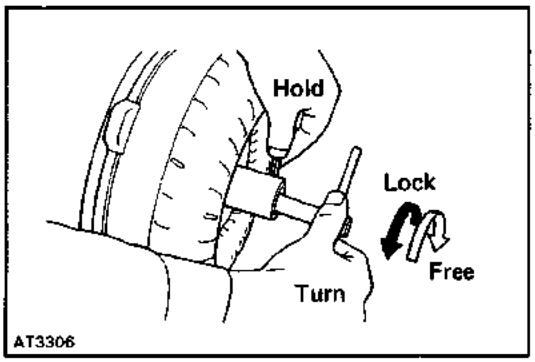

(c) With the torque converter clutch standing on its side, the clutch locks when turned counterclock–wise, and rotates freely and smoothly clockwise.
If necessary, clean the converter and retest the clutch.
Replace the converter if the clutch still fails the test.

2. MEASURE DRIVE PLATE RUNOUT AND INSPECT RING GEAR

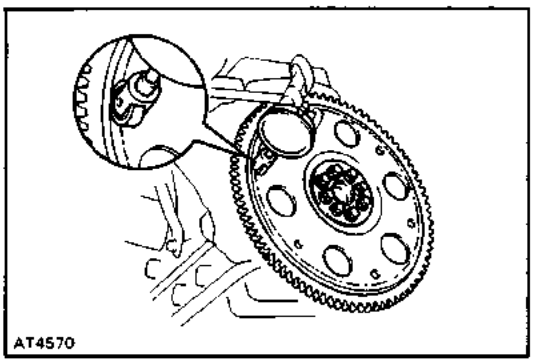

Set up a dial indicator and measure the drive plate runout.
If runout exceeds 0.20 mm (0.0079 in.) or if the ring gear is damaged, replace the drive plate. If installing a new drive plate, note the orientation of spacers and tighten the bolts.

Torque: 83 N–m (850 kgf–cm, 61 ft–lbf)

3. MEASURE TORQUE CONVERTER CLUTCH SLEEVE RUNOUT

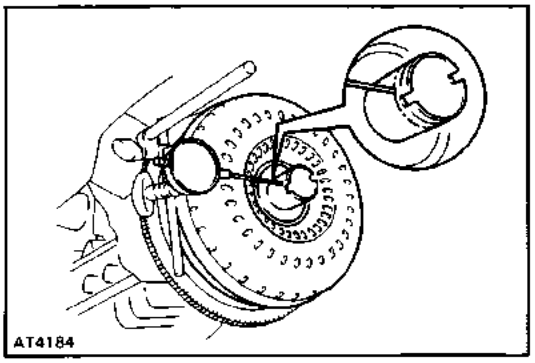

(a) Temporarily mount the torque converter clutch to the drive plate. Set up a dial indicator.
If runout exceeds 0.30 mm (0.0118 in.), try to correct by reorienting the installation of the converter. If excessive runout cannot be corrected, replace the torque converter
clutch.

HINT: Mark the position of the converter to ensure correct installation.

(b) Remove the torque converter clutch.

SHIFT LOCK SYSTEM

(Electrically Controlled Shift Lock System)

COMPONENTS AND CIRCUIT

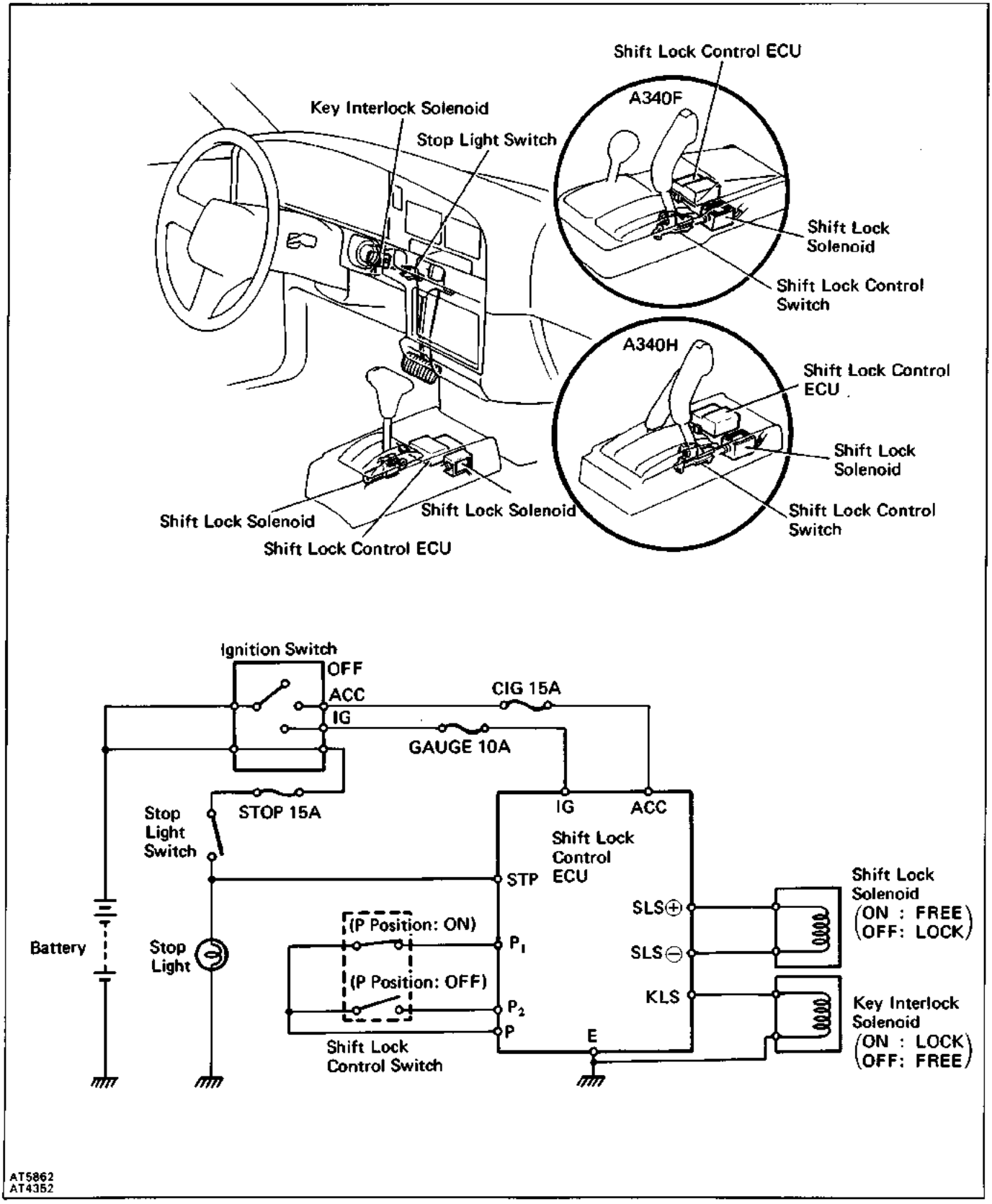

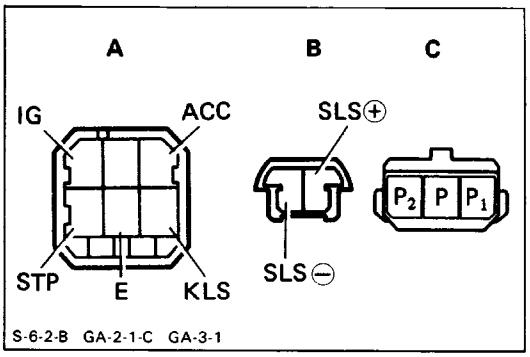

INSPECTION OF ELECTRIC CONTROL COMPONENTS

1. INSPECT SHIFT LOCK CONTROL COMPUTER

Using a voltmeter, measure the voltage at each terminals.

Connector	Terminal		Measuring condition	Voltage (V)
A	ACC – E		IG SW ACC position	10 – 14
	IG – E		• G SW ON position	10 – 14
	STP – E		Depress brake pedal	10 – 14
	KLS – E	①	IG SW ACC position and P position	0
		②	P –i R, N, D, 2, L position	10 – 14
		③	↑ (Approx. after one second)	6 – 9
B	SLS ⊕ – SLS ⊖	①	IG SW ON position and P position	0
		②	Depress brake pedal	10 – 14
		③	P¿ R, N, D, 2, L positions or release brake pedal	0
C	P_1 – P	①	IG SW ON, P position and depress brake pedal	0
		②	R, N, D, 2, L positions	10 – 14
	P_2 – P	①	IG SW ACC position and P position	10 – 14
		②	R, N, D, 2, L positions	0

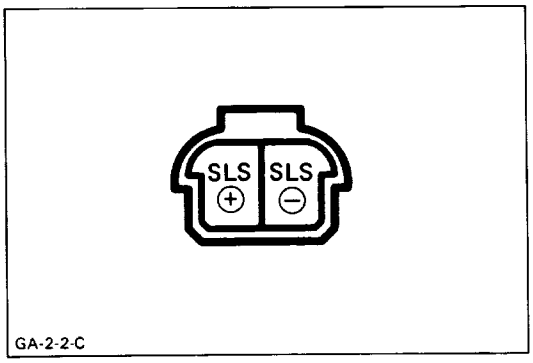

2. INSPECT SHIFT LOCK SOLENOID

(a) Disconnect the solenoid connector.
(b) Using an ohmmeter, measure the resistance between terminals.
Standard resistance: 29 – 36Ω
(c) Apply the battery positive voltage between terminals. At this time, confirm that a solenoid operation

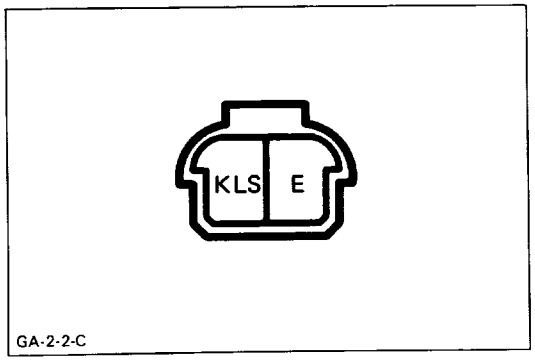

3. INSPECT KEY INTERLOCK SOLENOID

(a) Disconnect the solenoid connector.
(b) Using an ohmmeter, measure the resistance between terminals.
Standard resistance: 12 – 17Ω
(c) Apply the battery positive voltage between terminals. At this time, confirm that a solenoid operation

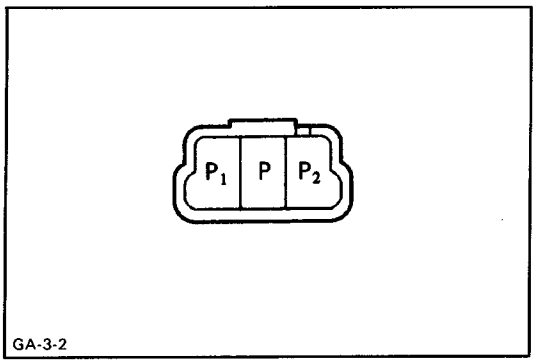

4. INSPECT SHIFT LOCK CONTROL SWITCH

Inspect that there is continuity between each terminals.

: Continuity

Shift Position \ Terminal	P	P_1	P_2
P position (Release button is not pushed)	○	○	
R, N, D, 2, L positions	○		○

(Mechanically Controlled Shift Lock System)

COMPONENTS

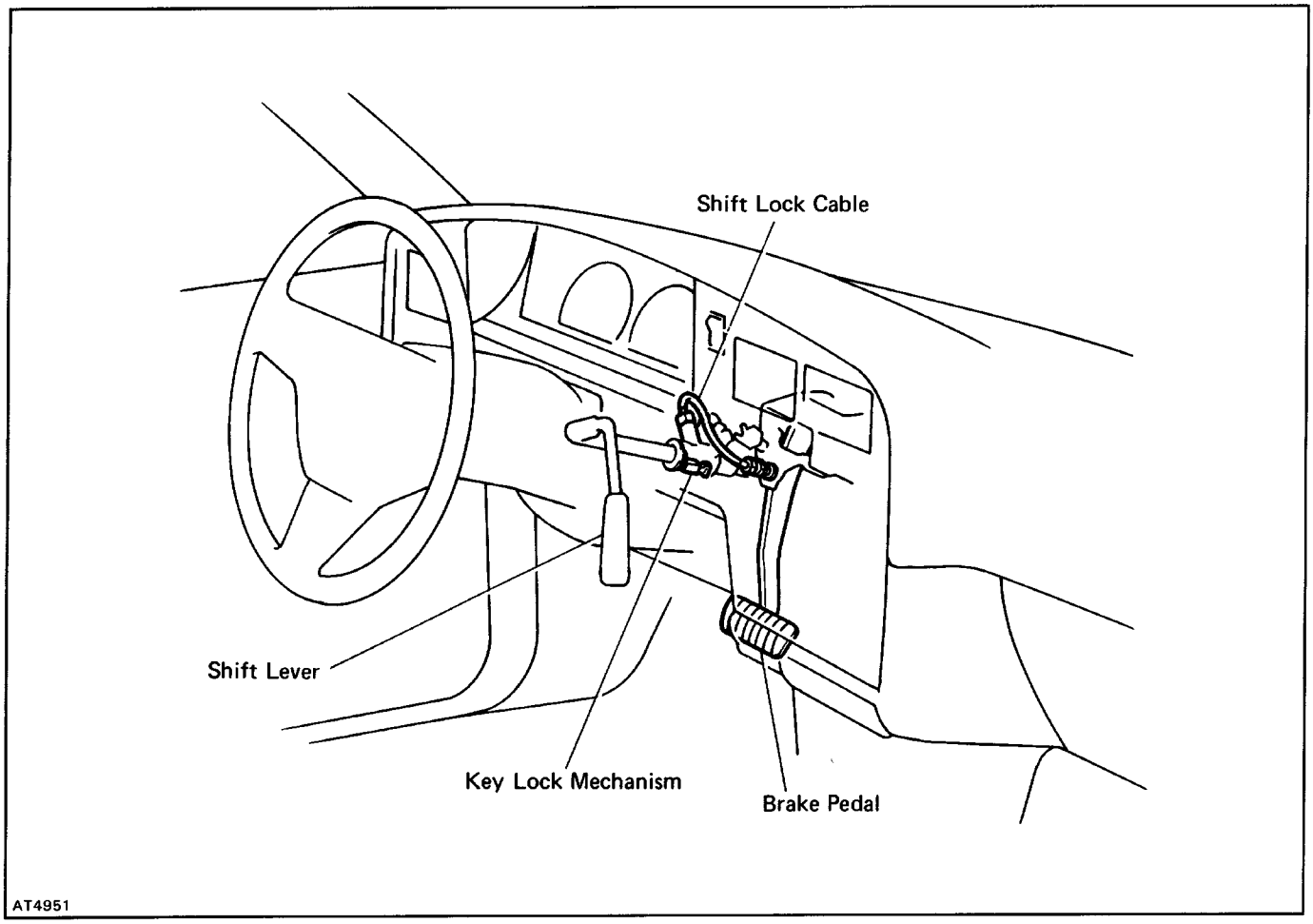

HINT: Do the following steps, after replacing the shift–lever, ignition switch, shift lock cable and brake pedal.

(a) Check that the stop lights turn on whlile depressing the brake pedal.

(b) Check that the stop lights turn off when releasing the brake pedal.
If stop light operation is not as specified, adjust the stop light switch position.